GE Fanuc Automation

Programmable Control Products

TCP/IP Ethernet Communications for the Series 90™ PLC

User's Manual

GFK-1541B *May 2002*

Warnings, Cautions, and Notes as Used in this Publication

Warning

Warning notices are used in this publication to emphasize that hazardous voltages, currents, temperatures, or other conditions that could cause personal injury exist in this equipment or may be associated with its use.

In situations where inattention could cause either personal injury or damage to equipment, a Warning notice is used.

Caution

Caution notices are used where equipment might be damaged if care is not taken.

Note

Notes merely call attention to information that is especially significant to understanding and operating the equipment.

This document is based on information available at the time of its publication. While efforts have been made to be accurate, the information contained herein does not purport to cover all details or variations in hardware or software, nor to provide for every possible contingency in connection with installation, operation, or maintenance. Features may be described herein which are not present in all hardware and software systems. GE Fanuc Automation assumes no obligation of notice to holders of this document with respect to changes subsequently made.

GE Fanuc Automation makes no representation or warranty, expressed, implied, or statutory with respect to, and assumes no responsibility for the accuracy, completeness, sufficiency, or usefulness of the information contained herein. No warranties of merchantability or fitness for purpose shall apply.

The following are trademarks of GE Fanuc Automation North America, Inc.

Alarm Master	Genius	PowerTRAC	Series Six
CIMPLICITY	Helpmate	ProLoop	Series Three
CIMPLICITY 90–ADS	Logicmaster	PROMACRO	VersaMax
CIMSTAR	Modelmaster	Series Five	VersaPoint
Field Control	Motion Mate	Series 90	VersaPro
GEnet	PowerMotion	Series One	VuMaster
			Workmaster

©Copyright 2002 GE Fanuc Automation North America, Inc.
All Rights Reserved.

Contents

Chapter 1 Introduction 1-1

The Ethernet Interface 1-2
Ethernet Interface Ports 1-4
The Station Manager Software 1-7

Chapter 2 Installation 2-1

Installing an IC693CMM321 Ethernet Interface Module 2-2
Installing an IC693CPU364 with Embedded TCP/IP Ethernet Interface 2-16
Installing an IC693 CPU374 with Embedded TCP/IP Ethernet Interface 2-30
Installing the IC697CMM742 Ethernet Interface 2-41

Chapter 3 Programming SRTP Channel Commands 3-1

The Communications Request 3-2
COMMREQ Function Block and Command Block 3-6
Channel Commands 3-9
Status Data 3-31
Controlling Communications in the Ladder Program 3-43

Chapter 4 Programming Modbus/TCP Channel Commands 4-1

The Communications Request 4-2
COMMREQ Function Block and Command Block 4-5
Modbus TCP Channel Commands 4-8
Status Data 4-20
Controlling Communications in the Ladder Program 4-26

Chapter 5 Ethernet Global Data 5-1

Overview of EGD 5-2
Configuring EGD 5-12
Adapter Names, Aliases, and Groups 5-21
Exchange Status Word 5-23
Simple Network Time Protocol (SNTP) 5-25

Chapter 6 Network Administration Support 6-1

IP Addressing 6-2
Gateways 6-4
Subnets and Multiple Gateways 6-5
Configuring Multiple Gateways 6-7
Network Address Naming Architecture 6-9

Chapter 7 Troubleshooting 7-1

Diagnostic Tools Available for Troubleshooting 7-2
What to do if you Cannot Solve the Problem 7-3
PLC Fault Table 7-4

Appendix A Glossary A-1

Appendix B Communications Port Characteristics B-1

RS-232, RJ-11 Serial Port B-2
RS-485, 15-Pin, D-Type Port B-4
10Base-T Port B-6
10Base-T/100Base Tx Port B-8
10Base2 Port B-11
AAUI Port B-13
AUI Port B-19

Appendix C PC Software Loader C-1

Updating Firmware Under Windows C-2
Updating Firmware Under DOS and Windows 3.xx C-4

Appendix D Using the IC697CMM742 with PLC CPU Versions 4.12 - 5.50 ..... D-1

Ethernet Interface Operational Restrictions D-6

Appendix E Translating PLC CPU Reference Addresses to Modbus Register Addresses for the IC693CMM321 ..... E-1

Chapter 1 Introduction

This manual describes the following *Ethernet Interfaces* for the Series 90 PLC:

- Series 90-30 PLC TCP/IP Ethernet Interface (IC693CMM321)
- Series 90-30 PLC CPU364 with embedded TCP/IP Ethernet Interface (IC693CPU364)
- Series 90-30 PLC CPU374 with embedded TCP/IP Ethernet Interface (IC693CPU374)
- Series 90-70 PLC TCP/IP Ethernet Interface (Type 2) (IC697CMM742)

The general term, *Ethernet Interface*, will be used in this manual except when differences in the Interfaces require the more specific terms.

The Series 90-30 PLC CPU 364 and CPU374 are both modules that contain a PLC CPU and an embedded Ethernet Interface. The general term Embedded Ethernet Interface will be used in this manual to refer to these modules.

This chapter provides an overview of the Ethernet Interface and covers the following topics:

- The Ethernet Interface
- How to Make the System Work
- Quick Guide to the Manual

The Ethernet Interface

The Ethernet Interface enables Series 90 PLCs to communicate with other Series 90 PLCs, with with GE Fanuc PLC programming software, and with applications developed using the SRTP protocol, such as CIMPLICITY® HMI.

The Ethernet Interfaces described in this manual have “client/server” capability. As a “client” the Interfaces can initiate communications with other Series 90 PLCs containing Ethernet Interfaces. This is done from the PLC ladder program using the COMMREQ function. As a “server” the Interfaces respond to requests from other devices such as PLC programming software, a Host computer running an SRTP application, or another Series 90 PLC acting as a “client”. No PLC programming is required for server operation.

Ethernet Communications System

The diagram below represents a basic Ethernet Communications system.

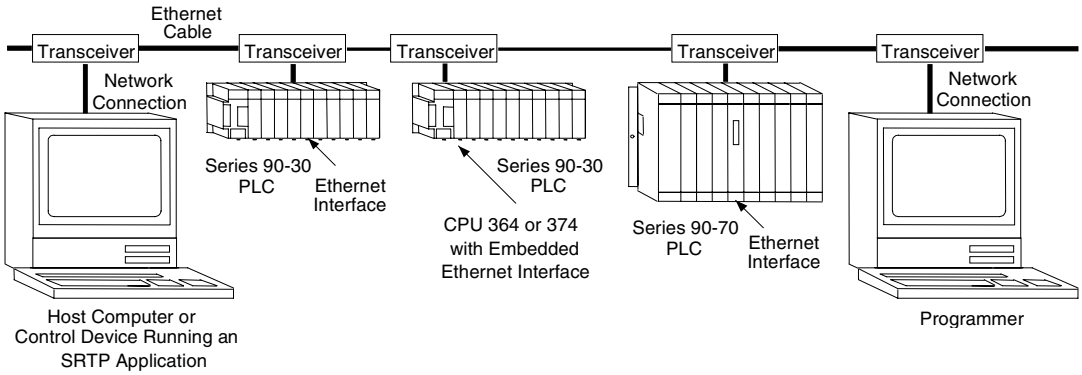

® Windows is a registered trademark of Microsoft Corporation.

Capabilities of the Ethernet Interface

The Ethernet Interface brings to your PLC a great deal of capability. It will allow you to:

- **Become operational quickly.** The Ethernet Interface is made operational with very little effort. You need only install the Interface in the PLC rack or baseplate and use the PLC programming software to store basic configuration information to the module to make the basic SRTP server capability functional. SRTP Client capability, the capability to initiate communications, can be added using the COMMREQ function in the ladder program. For Series 90-30 Ethernet Interface IC693CMM321-FH and later, basic Modbus/TCP server capability is available as soon you supply basic configuration information to the module, and you can use COMMREQs to initiate Modbus/TCP communications.
- **Directly attach your PLC to an Ethernet network.** The Ethernet Interface allows you to directly attach the Series 90 PLC to an Ethernet LAN via the built-in network ports or via a user-supplied transceiver and AUI or AAUI cable, and to communicate with host computers and other Series 90 PLCs on the local network.
- **Ethernet Global Data.** (Series 90-30 CPU364 and CPU374 and Series 90-70 Ethernet Interface (Type 2) only.) When used with the latest Series 90 CPUs, the Ethernet Interface provides highly efficient periodic data transfer between PLCs using Ethernet Global Data exchanges.
- **Transfer data between PLCs.** The Ethernet Interface provides client capability, the capability to initiate communications to other Series 90 Ethernet Interfaces, using COMMREQ functions in the ladder program.
- **Access data using a Host computer.** Computer applications which use the SRTP protocol can access data within the Series 90 PLC through the server capability of the Ethernet Interface. .
- **Communicate simultaneously to multiple devices.** The multiplexing capabilities of the Ethernet Interface, along with Ethernet network's high capacity, allow the PLC to communicate with several other devices at the same time.
- **Maintain compatibility with other GE Fanuc devices and devices from other vendors.** The Series 90-30 Ethernet Interface, Series 90-30 CPU364 Embedded Ethernet Interface, Series 90-30 CPU374 Embedded Ethernet Interface, and Series 90-70 Ethernet Interface (Type 2) are compatible with each other. They are also compatible with GE Fanuc programming packages supporting TCP/IP Ethernet communications.
- **Diagnose and maintain your system, using diagnostic and station management tools.** You can find problems before they become serious. In the event that communications software upgrades are needed, you can use a built-in serial port to download the software to the Ethernet Interface.
- **Indirectly attach to other Local Area Networks and/or wide area networks via third party IP routers.** When configured to use an IP gateway (router), the Ethernet Interface can communicate with remote PLCs and other nodes reachable through the router.
- **Communicate with remote computers via Serial Line Protocol (SLIP) using modems and/or serial lines.** Using third party SLIP software, a remote host computer can be attached to a TCP/IP network.
- **Communicate with other Series 90 PLCs using symbolic names as well as IP addresses.** COMMREQs can be programmed to communicate with PLCs using IP addresses or Network Address names (Series 90-30 Ethernet Interface, Series 90-30 CPU364 Embedded Ethernet Interface, and Series 90-70 Ethernet Interface (Type 2)).

®Windows and Windows NT are registered trademarks of Microsoft Corporation.

Ethernet Interface Ports

The Ethernet Interfaces provide ports for connection to the Ethernet network as listed below.

IC693CMM321 Series 90-30 TCP/IP Ethernet Interface	▪ AAUI Port ▪ 10Base-T Port (RJ-45) (Module version FG or later)
IC693CPU364 Series 90-30 CPU with Embedded TCP/IP Ethernet Interface	▪ AAUI Port ▪ 10Base-T Port (RJ-45)
IC693CPU374 Series 90-30 CPU with Embedded TCP/IP Ethernet Interface	▪ Auto-sensing 10Base-T Port (RJ-45)
IC697CMM742 Series 90-70 TCP/IP Ethernet Interface (Type 2)	▪ 10Base-T Port (RJ-45) ▪ AUI Port ▪ 10Base2 Port (BNC)

Port Descriptions

10Base-T, RJ-45 port *(Series 90-30 Ethernet Interface (10Base-T Type), Series 90-30 CPU364, and Series 90-70 IC697CMM742 Ethernet Interface (Type 2))*

The 10Base-T port uses a twisted pair cable of up to 100 meters in length between each node and a hub or repeater. Typical hubs or repeaters support 6 to 12 nodes connected in a star wiring topology.

Auto-sensing 10 Base T / 100 Base TX, RJ-45 Port *(Series 90-30 CPU374 only)*

The auto-sensing 10 Base T / 100Base TX ports are connected to a switch device embedded in the Ethernet Interface. They use a twisted pair cable (unshielded or shielded) of up to 100 meters in length between the node and another node, a hub, a repeater, or a switch. The port automatically senses the speed (10Mbps or 100Mbps), duplex mode (half duplex or full duplex) and cable (straight-through or crossover) attached to it with no intervention required.

10Base2, BNC port *(Series 90-70 Ethernet Interface (Type 2))*

The 10Base2 port uses a 0.2 inch diameter 50-ohm coaxial cable and is commonly called “thin wire”. The maximum length of a cable segment is 185 meters. A maximum of 30 stations is allowed on a 10Base2 Ethernet segment.

AUI Port *(Series 90-70 Ethernet Interface (Type 2))* **and**
AAUI Port *(Series 90-30 Ethernet Interface (AAUI-only Type) and Series 90-30 CPU364)*

The AUI and AAUI ports provide the electrical and mechanical interface to the user-provided Ethernet transceiver cable, which connects the AUI or AAUI port to an external user-provided transceiver. (The transceiver cable may be separate or built-in to the transceiver.) The external transceiver is directly connected to the Ethernet cable.

Ethernet Media

Various Ethernet baseband media (10Base...) can be interconnected by appropriate hubs or repeaters. Capabilities and limitations are defined in IEEE 802.3 Chapter 13, "System Considerations for Multi-Segment Networks". This document is published by the Institute of Electrical and Electronics Engineers, Inc., 345 East 47th Street, New York, NY 10017-2394 USA.

The Ethernet Interface can operate on any of the following media with the appropriate user-supplied transceiver cable and transceiver. IEEE 802.3 specifies the definitive requirements of each medium.

10Base5 Coax: 10Base5 uses a 0.4 inch diameter 50-ohm coaxial cable and is commonly called "thick wire". The maximum length of a cable segment is 500 meters. The distance between any two stations must be a multiple of 2.5 meters. A maximum of 100 stations is allowed on a 10Base5 Ethernet segment.

10Base2 Coax: 10Base2 is described above.

10Base-T: 10Base-T is described above.

10Base-F: 10Base-F has two variations that both use the same type of fiber-optic cable. 10Base-FP can support up to 33 nodes at distances of up to 500 meters from a passive star; 10Base-FL supports up to 2000 meters between a node and a repeater (a multi-port repeater would thus constitute a star). Additionally, 10Base-FB provides a means of interconnecting (only) repeaters by up to 2000 meters of (the same) fiber-optic cable.

10Broad36: 10Broad36 uses 75-ohm coaxial cable and CATV-like media components (taps, amplifiers, headend translators, etc.) to support hundreds of nodes at distances of up to 2800 meters. Broadband cannot be connected to baseband via repeaters. Broadband cable plant design and installation must be in accordance with IEEE 802.7 and requires special expertise. GE Fanuc recommends you contract professional specialists for these services. Consult your GE Fanuc sales representative or field service office for help in identifying local specialists.

Special Considerations for Ethernet Interfaces with Embedded Switches

Ethernet Interfaces that incorporate embedded switches (only the Series 90-30 CPU374) provide some additional connection options and have some additional installation and operation considerations.

These Ethernet Interfaces provide two RJ-45 connectors on the front of the module. It is important to realize that there is only one interface to the network (only one Ethernet address and only one IP address) provided by these Ethernet Interfaces. The two connectors allow up to two Ethernet devices (hubs, switches, other PLCs, PCs) to be connected to the Ethernet Interface. This arrangement is diagrammed below.

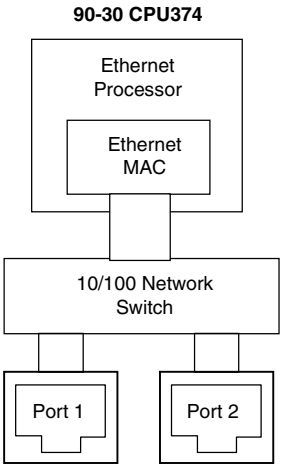

For simple installations, the embedded switch allows PLCs and other devices to be connected together without requiring any additional components.

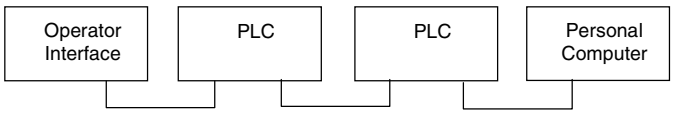

It is also possible to daisy-chain PLCs together without additional components, but that should be done with great care. In designing a system, remember that a loss of power or reset on any Ethernet Interface in a daisy chain will cause loss of communications with all devices downstream from the lost module.

The second port, if left unused, can be used to plug in a programmer over Ethernet.

Caution

The two ports on the Ethernet Interface must not be connected, either directly or indirectly, to the same device. The hub or switch connections in an Ethernet network must form a tree, otherwise duplication of packets may result.

The Station Manager Software

The built-in Station Manager software provides on-line supervisory access to the Ethernet Interface, through either the Station Manager port or over the Ethernet cable. The Station Manager services on the Ethernet Interface include:

- An interactive set of commands for interrogating and controlling the station.
- Unrestricted access to observe internal statistics, an exception log, and configuration parameters.
- Password security for commands that change station parameters or operation.

Access to the Station Manager is attained through a user-provided computer terminal or terminal emulator. See GFK-1186, *TCP/IP Ethernet Communications for the Series 90 PLC Station Manager Manual*, for more information on the Station Manager.

The PC Software Loader

The PC Software Loader is a separate software utility which runs on a PC in order to update the communications software stored in flash memory in the Ethernet Interface. This utility is supplied with any updates to the Ethernet Interface software.

How to Make the System Work

There are only a few simple tasks required to get your Ethernet communications system working. These tasks are addressed in detail later in this manual.

1. Install the Ethernet Interface into the Series 90 rack or baseplate and connect it to the network.
2. Power-up the PLC.
3. Configure the Ethernet Interface using the PLC programming software and store to the PLC.
4. To add optional SRTP client capability, refer to Chapter 3 “Programming SRTP Channel Commands” . To add optional Modbus/TCP client capability (Series 90-30 Ethernet Interface IC693CMM321-FH or later only), refer to Chapter 4 “Programming Modbus/TCP Channel Commands”. To configure or program Ethernet Global Data, refer to Chapter 6, “Ethernet Global Data”.

Chapter 2 Installation

This chapter contains installation instructions for each Series 90 module that includes an Ethernet Interface.

- Section 1: IC693CMM321 Series 90-30 TCP/IP Ethernet Interface (10Base-T type)
- Section 2: IC693CPU364 Series 90-30 CPU with Embedded TCP/IP Ethernet Interface
- Section 3: IC693CPU374 Series 90-30 CPU with Embedded TCP/IP Ethernet Interface
- Section 4: IC697CMM742 Series 90-70 TCP/IP Ethernet Interface

Each section covers the basic features of the Ethernet Interface, its installation, configuration, and a procedure for its initial checkout on your Ethernet cable. Each section first provides a hardware overview of the Ethernet Interface and is then divided into four Installation Procedures, each providing an overview of the procedure and then explaining the detailed steps to be performed.

The installation procedures described for each Ethernet Interface are:

- Installing the Ethernet Interface in the PLC - ***Required***
- Configuring the Ethernet Interface - ***Required***
- Verifying Proper Power-Up of the Ethernet Interface - ***Required***
- "Pinging" the Ethernet Interfaces on the Network - ***Optional***

Some of the procedures require prior Ethernet cable plant design and installation.

Installing an IC693CMM321 Ethernet Interface Module

The IC693CMM321Ethernet Interface mounts in a Series 90-30 PLC baseplate. It connects to an Ethernet network either directly through its 10Base-T port (10Base-T Type only), or through its AAUI port, which requires a user-provided transceiver and cable. If using the AAUI port, you may order a transceiver from GE Fanuc (see Appendix B for information) or supply your own equivalent transceiver. .

IC693CMM321 Series 90-30 TCP/IP Ethernet Interface (10Base-T Type)

CMM321 versions EF or earlier do not have a 10Base T port.

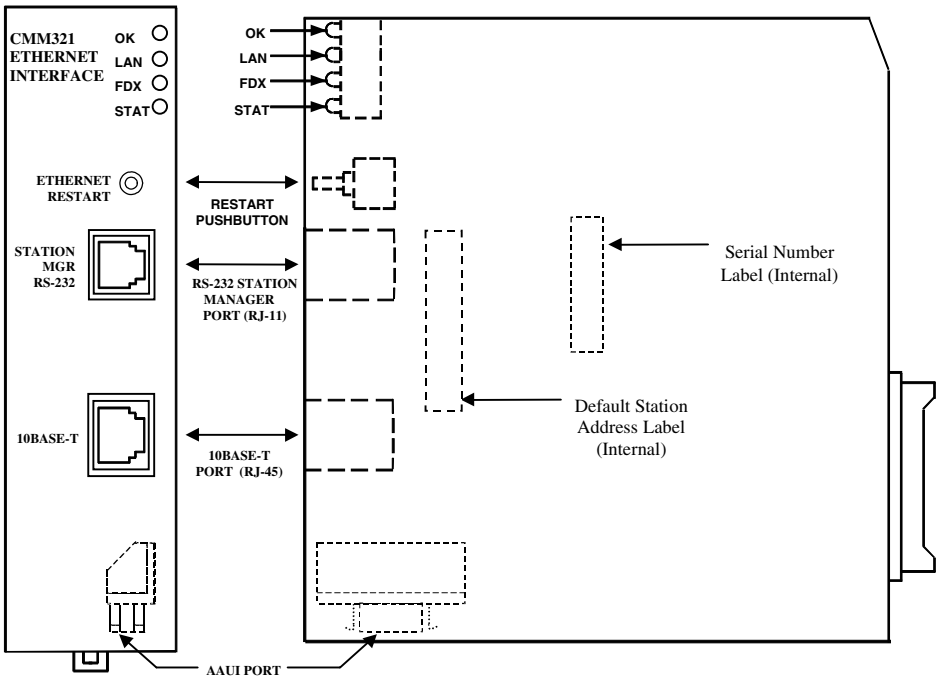

This module has several user-accessible features:

- Four LEDs are located at the top of the board.
- The Restart pushbutton is located immediately below the LEDs.
- The Station Manager port (RS-232 serial port with an RJ-11 connector) is located on the front of the module.
- The 10Base-T Ethernet port (RJ-45 connector) is located on the front of the module. It does not require an external transceiver.
- The AAUI port (14-pin AAUI connector) is accessible through an opening in the bottom of the module. It requires an external transceiver.
- The Default Station Address label lists the MAC address to be used by this Interface. It is located by removing the module's front cover and looking on the circuit board.
- The module's serial number is on the silver label on the left side of the module.

LEDs

There are four LEDs on the CMM321 module. Each of these LEDs can be ON, OFF, or BLINKING.

LED	Indication Function
OK	State of the Ethernet Interface
LAN	Traffic on the network port
FDX	Configuration of Full Duplex mode.
STAT	An exception event has occurred

All LEDs are briefly turned ON whenever a restart is performed in the Operational state by pressing and releasing the Restart pushbutton (described below). This allows you to verify that all LEDs are operational. (On module versions EF or earlier, the FDX LED is labeled "SER".)

Restart Pushbutton

The Restart pushbutton serves four functions: LED test, Restart, Restart and enter Software Load state, and Restart and enter Maintenance state. These four functions behave similarly in all states except for the Software Load state. While in this state, pressing the pushbutton will cause an immediate restart into the Operational state (without performing the LED test) if the software in the Ethernet Interface has not been corrupted or erased. If the software has been corrupted or erased, pressing the pushbutton will cause an immediate restart back into the Software Load state. The following text describes Restart pushbutton behavior while not in the Software Load state.

Pressing the Restart pushbutton will disrupt Ethernet communications.

LED Test: Any time the Restart pushbutton is released, *all* the LEDs flash ON. You should visually verify that all the LEDs go OFF and then ON at this time. Then the Interface performs either a restart, a restart and enter Software Load state, or a restart and enter Maintenance state, depending on the duration that you press the pushbutton.

Restart: Pressing the Restart pushbutton momentarily (less than 5 seconds) requests a restart of the Ethernet Interface. When the Restart pushbutton is pressed, all LEDs go out. When it is released, all LEDs flash ON, then power-up diagnostics run, and the software on the Interface is restarted into the Operational state.

Restart and Enter Software Load State: Pressing and holding the Restart pushbutton until the bottom LED (STAT) turns ON (between 5 and 10 seconds) forces a restart and requests entrance to the Software Load state. A reload is used to install a software update into the module and is not part of normal operation. When the Restart pushbutton is pressed, all LEDs go out. After approximately 5 seconds have elapsed, the STAT LED (bottom LED) comes ON, to indicate that the Ethernet Interface will request a reload. After the Restart pushbutton is released, all LEDs flash ON, then power-up diagnostics run, and the Ethernet Interface waits for the software load with all LEDs blinking in unison.

Notes

Reloading the Ethernet Interface requires the attachment of the PC Software Loader to the Software Loader port and initiating a load with the PC Software Loader. The PC Software Loader is a separate software utility that updates the communications software in the Ethernet Interface. This utility is supplied with any updates to the Ethernet Interface software.

At any time before you initiate a load with the PC Software Loader when the Ethernet Interface is in the Software Load State, you can restart the Ethernet Interface by pressing the Restart pushbutton. Pressing this pushbutton will immediately cause the board to restart. If the reload has been initiated, see Appendix C, "Upgrading the Ethernet Interface Firmware," for more information.

Restart and Enter Maintenance State: Pressing and holding the Restart pushbutton until the bottom two LEDs turn ON (approximately 10 seconds) forces a restart and requests entrance to the Maintenance state. Maintenance state must be invoked to change Advanced Parameters. While in Maintenance state, all Advanced Parameters revert to their default value. When the Restart pushbutton is pressed, all LEDs go out. After approximately 5 seconds, the STAT LED comes ON, then after approximately a total of 10 seconds have elapsed, the FDX LED also comes ON, to indicate that the Ethernet Interface will request entry to the Maintenance state. After the Restart pushbutton is released, all LEDs flash ON then power-up diagnostics run and the Ethernet Interface enters the Maintenance state.

Notes

If a Restart is performed, any data being transferred by the Ethernet Interface at that time will be lost.

The Restart pushbutton is not operable during the diagnostic phase of power-up. The Ethernet Interface is in diagnostic phase when the OK LED is BLINKING fast and other LEDs are OFF.

Ports on the CMM321

RS-232, RJ-11 Port (Station Manager Port)

The RS-232, 6-pin, RJ-11 “phone jack” port is used to connect a terminal or terminal emulator to access the Station Manager software on the Ethernet Interface. A cable is needed to connect the terminal or emulator to the Ethernet Interface (see Appendix B, “Communications Ports Characteristics”). This port is also used to update the module’s firmware.

Ethernet Ports

The CMM321 has just one Ethernet interface. Connection to the Ethernet network can be made either through the 10Base-T connector or the AAUI connector. You must connect to just one or the other connector; you cannot use both at the same time. Note that module versions EF and earlier do not have a 10Base T port, and can only be connected through their AAUI port.

10Base-T Port

This port is located on the front of the module and it can be directly connected to a 10Base-T network (no external transceiver is needed). It uses a standard RJ-45 jack. See Appendix B for port details.

AAUI (Transceiver) Port

This port uses a standard 14-pin AAUI connector to provide the electrical and mechanical interface to a user-provided IEEE 802.3 transceiver. See Appendix B for Port details.

Caution

Do not connect or disconnect a transceiver cable at the AAUI port while power is applied to the PLC. This may blow the AAUI port fuse and/or cause permanent damage to the Ethernet Interface.

CMM321 Labels

Default Station Address Label

The Default Station Address label lists the MAC address to be used by this Interface.

Serial Number Label

The Serial Number Label indicates the serial number of this Interface.

Non-Replaceable AAUI Fuse

A non-replaceable fuse is provided on the DC power that is supplied by the Ethernet Interface to the AAUI network port for use by an external transceiver. If this fuse blows, you must return the Ethernet Interface to GE Fanuc for repair.

Installing the CMM321 in the PLC

For general information about module and system installation, refer to GFK-0356, *Series 90-30 Programmable Controller Installation Manual*.

Equipment Required to Perform the Installation Procedures

Make sure you have the items listed below before you begin.

- A Series 90-30 PLC CPU baseplate, or any Series 90-30 baseplate and a Series 90-30 CPU with power supply.
  - The CMM321 requires CPU version 6.50 or higher for full functionality. CPU versions 5.03 to 6.04 permit Ethernet operation with only 1 SRTP server connection.
  - The CMM321 requires PLC power supply IC693PWR321 (Revision K or later), IC693PWR322, or IC693PWR330.
- PLC programming software: Logic Developer (all versions), Control Version 2.01 or higher, VersaPro™ version 1.0 or higher, or Logicmaster 90-30 version 6.01 or higher. (And a compatible PC-compatible personal computer.)
- If you are using the AAUI port instead of the 10Base-T port, you will need an Ethernet-compatible AAUI transceiver and Ethernet cables. (See Appendix B for more information on the ports and transceivers.) ***Optional***
- An IC693CBL316 serial cable for the Station Manager port on the Ethernet Interface (see Appendix B). ***Optional***
- A terminal or IBM-compatible personal computer equipped with terminal emulation software. ***Optional***

Notes

If your installation requires CE Mark compliance, please refer to GFK-1179, *Installation Requirements for Conformance to Standards*, shipped with the PLC programming software, for additional guidelines.

A CMM321 can be mounted on a CPU baseplate, an expansion baseplate, or a remote baseplate. However, due to power requirements, only ***two*** Ethernet Interface modules are permitted per baseplate using a standard power supply. Up to four Ethernet Interface modules are permitted per baseplate using a high capacity power supply.

CMM321 Installation

Use the following instructions as a guide when inserting a module into a slot in a baseplate. These instructions assume that the power supply on the baseplate is to your left.

Warning

Do not insert or remove modules with power applied. This could cause the PLC to Stop, damage the module, or result in personal injury.

1. Be sure the Series 90-30 PLC baseplate power is OFF.
2. Align the module with the desired base slot and connector. Tilt the module upwards so that the top rear hook of the module engages the slot on baseplate.
3. Swing the module downward until the connectors mate and the lock-lever on the bottom of the module snaps into place engaging the baseplate notch.
4. Visually inspect the module to be sure that it is properly seated.
5. Connect the cable using one of the two following methods:
   - If using a 10Base-T connection, plug the cable into the 10Base-T port on the front of the module.
   - If using the AAUI connection, connect the transceiver cable into the 14-pin AAUI port on the bottom of the module, secure the cable, and connect the other end of the cable to an external IEEE 802.3 compatible transceiver that is attached to the Ethernet network. ***SQE must be enabled on the transceiver.*** (Note: The transceiver cable may be either built-in to the transceiver or removable.)

Caution

Do not connect or disconnect a transceiver cable to the AAUI port while power is applied to the PLC. This may blow the AAUI port fuse and/or cause permanent damage to the Ethernet Interface.

6. Use the PLC programming software or a Hand Held Programmer to make sure the PLC CPU is in Stop mode.

CMM321 Configuration

Before you can use the Ethernet Interface you must configure the module using the PLC programming software. The PLC programming software allows you to specify the modules and I/O that will reside in your Series 90-30 PLC rack(s). The Hand Held Programmer can *not* be used to configure the Ethernet Interface.

For the Ethernet Interface specifically, the configuration software allows you to:

- Define the Status address of the Ethernet Interface.
- Assign the IP address for the Ethernet Interface, and optionally the subnet mask and the gateway address.
- Configure the serial ports (optional).

Configuring the Interface Using Windows-Based Programming Software

To configure theCMM321 using Control, VersaPro™ or Logic Developer programming software, do the following:

1. In Control and VersaPro™, from the Browser, double-click the 90-30 Rack System–Local Rack icon. The Local Rack Window will appear. In Logic Developer, expand the hardware configuration and the desired rack in the browser.
2. In Control and VersaPro™, click the tab corresponding to the desired rack.
3. Click the desired slot, press the right mouse button, and choose Add Module from the menu. (If the slot already contains a module, choose Replace Module.) The Module Catalog dialog box will then appear.
4. In the Module Catalog dialog box, click the Communications tab, select IC693CMM321 Ethernet Interface, and then click the OK button. The Parameters dialog box will then appear.
5. This dialog box will allow you to edit the module's Ethernet parameters. To edit a parameter value, click in the appropriate Values field. Refer to the topic "Configuration Parameters" that follows for more information on these fields.
6. Optionally, after you have completed the Settings tab, you can then change the default settings of the Station Manager and Software Loader ports by clicking the appropriate tab. We recommend leaving the serial port parameters at default settings.
7. If you want to assign variable names to specific status points on the Ethernet card, click the Point Reference tab. To assign a variable to a point, double-click the reference address you want. The Insert Variable dialog box will appear, which will allow you to fill in a variable name and description.
8. If you want to view the power consumption of this module, click the Power Consumption tab. After you have configured all of the module's applicable parameters, click the OK button. The module will now appear in the selected slot.
9. Store the configuration to the PLC so these settings can take effect.

For more information, refer to Online Help in the PLC programming software.

Configuring the Interface Using the Logicmaster 90-30 Configuration Software

To configure the CMM321, access the I/O Configuration rack screen in the Logicmaster 90-30 Configuration Package, and do the following:

1. Move the cursor to the desired rack and slot location. The slot may be either unconfigured or previously configured.
2. Press the **Communications** softkey, i.e., **Comm** (`F6`).
3. Press **Ethernet** (`F2`).
4. Press **Enter** to select the Ethernet Interface.
5. Configure the Ethernet parameters. Refer to the topic "Configuration Parameters" that follows for more information on these fields.
6. Optionally, after you have assigned the Ethernet parameters, press **Page Down** to display the serial port parameters. You can then change the default settings of the serial ports (optional). Refer to the topic "Configuration Parameters" that follows for more information on these fields. We recommend leaving the serial port parameters at default settings.
7. After you have completed the configuration, press the **Escape** key to return to the rack display. Press **Escape** again to save the configuration to disk.
8. Store the configuration to the PLC so these settings can take effect.

Refer to GFK-0466, *Logicmaster 90 Series 90-30/20/Micro Programming Software User's Manual* for more information on configuring the Ethernet Interface using Logicmaster 90-30 software.

CMM321 Configuration Parameters

Ethernet Parameters

Configuration Mode: This is fixed as TCP/IP.

Status Address: The Status address is the location of the LAN Interface Status (LIS) bits (16 bits) and the Channel Status bits (64 bits). The Channel Status bits are always located immediately following the LAN Interface Status bits. The Status address must be assigned to %I memory only. The default value is the next available %I address.

> Note: Do not use the 80-bits assigned to the LIS bits and Channel Status bits for other purposes or your data will be overwritten.

Status Length: This is fixed at 80 bits (the sum of the LIS bits and the Channel Status bits).

IP Address, Subnet Mask, Gateway IP Address, and Name Server IP Address: These values should be assigned by the person in charge of your network (the network administrator). TCP/IP network administrators are familiar with these parameters. It is important that these parameters are correct, otherwise the Ethernet Interface may be unable to communicate on the network and/or network operation may be corrupted. It is especially important that each node on the network is assigned a *unique* IP address.

However, if you have no network administrator and are configuring a simple, *isolated network* with no gateways, you can use the following range of values for the assignment of local IP addresses:

10.0.0.1	First PLC
10.0.0.2	Second PLC
10.0.0.3	Third PLC
.	.
.	.
10.0.0.255	PLC Programmer TCP or host

Also, in this case, set the subnet mask, gateway IP address, and name server IP address to 0.0.0.0.

Note

If the isolated network is ever connected to another network, the IP addresses 10.0.0.1 through 10.0.0.255 must not be used and the subnet mask, gateway IP address, and name server IP address must be assigned by the network administrator. The IP addresses must be assigned so that they are compatible with the connected network. Refer to Chapter 6, "Network Administration Support", for more information on addressing.

See also "Determining If an IP Address Has Already Been Used".

Converter: Allows you to account for the power consumption added by a serial port converter (measured in Watts). Choices are 0, 0.50, and 0.60.

AAUI Transceiver (Watts): If you use an AAUI transceiver, allows you to account for the power that the transceiver draws from the port (measured in Watts). The valid range is 0.25 to 2.00. The default value is 0.50.

Station Manager PortParameters

Data Rate (bps): Data rate (bits per second) for the port. Choices are 300, 600, 1200, 2400, 4800, 9600‡, or 19200*.

Parity: Type of parity to be used for the port. Choices are None‡, Even, or Odd*.

Stop Bits: Enter the number of stop bits. Choices are 1*‡ or 2.

Flow Control: This parameter is currently not used by the Ethernet Interface. Changing this parameter has no effect.

Turnaround Delay: Turnaround delay time (in milliseconds) to be used for the port. Choices are None*‡, 10 ms, 100 ms, or 500 ms.

Timeout: This parameter is currently not used by the Ethernet Interface. Changing this parameter has no effect.

* Default selection for the Software Loader Port.
‡ Default selection for the Station Manager Port.

Configuring Full-Duplex Operation

Before setting the module to Full-Duplex operation, be certain that it is connected directly to a managed hub or switch that is manually configured for full-duplex operation on the port connected to the IC693CMM321.

The default setting for the module is Half-Duplex. The Full Duplex parameter is an "advanced user parameter" that can only be changed by using the CHPARM (Change Parameter) command in the Station Manager softwar. Refer to GFK-1186, the *TCP/IP Ethernet Communications Station Manager Manual*, for additional information on using Station Manager.

Warning

Contrary to the recommendation of IEEE Std. 802.3, this Ethernet Interface module does NOT support autonegotiation of half/full-duplex. Attempting full-duplex operation of this interface with a repeater or half-duplex network (including auto-negotiating hubs and switches) can cause severe network performance degradation, increased collisions, late collisions, CRC errors, and undetected data corruption.

If the module is configured in the Full-Duplex mode (see above), you can change it back to its default value of Half-Duplex by using the Station Manager CHPARM command.

Verifying Proper Power-Up of the CMM321

Powering-up the Ethernet Interface

After configuring the CMM321, follow the procedure below to be sure it is operating correctly.

1. Turn power OFF to the PLC for 3–5 seconds, then turn the power back ON. This will initiate a series of diagnostic tests.

   The OK LED will blink indicating the progress of power-up.

2. The LEDs will have the following pattern upon successful power-up. At this time the Ethernet Interface is fully operational and on-line.

LED	*Ethernet Interface Online*
OK	ON
LAN	ON or blinking
FDX	ON Solid if Full Duplex mode is active OFF if Full Duplex mode is not active
STAT	ON

If STAT LED is OFF, check the PLC Fault Table. Alternatively, use the Station Manager LOG command as explained in GFK-1186, *TCP/IP Ethernet Communications for the Series 90 PLC Station Manager Manual*.

Problems During Power-up

If a problem is detected during power-up, the CMM321 may not transition directly to the Operational State. If the Interface does not transition to Operational, check the LED pattern on the Interface and refer to the following diagram and table for suggestions.

States of the Series 90-30 CMM321 Ethernet Interface

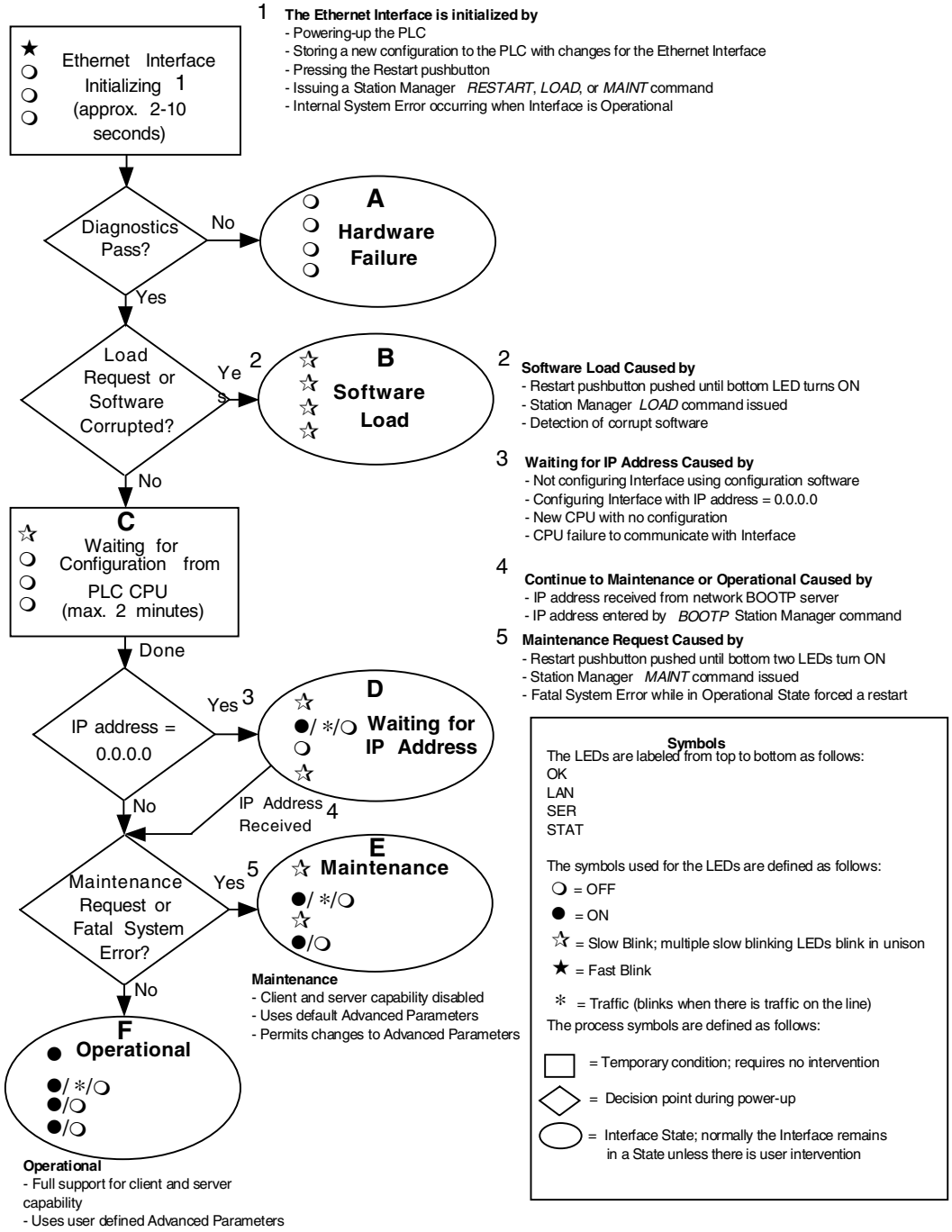

LED Pattern	Where Stopped	Possible Cause	Corrective Actions
❍ OK (OFF) ❍ LAN (OFF) ❍ FDX (OFF) ❍ STAT (OFF)	**A** **Hardware Failure**	Fatal Hardware Error.	▪ Make sure the PLC has power. ▪ Examine PLC Fault Table for clues.* ▪ Recheck PLC Programmer configuration. ▪ Power off baseplate, inspect the Interface for loose components, reseat the Interface, and Restart. ▪ Try a different slot. ▪ If the problem persists, replace the Interface or PLC hardware.
☆ OK (Slowblink) ☆ LAN (Slowblink) ☆ FDX (Slowblink) ☆ STAT (Slowblink) *All LEDs blink in unison.*	**B** **Software Loader**	▪ Restart pushbutton until bottom LED turns ON. ▪ Station Manager *LOAD* command issued. ▪ Software corrupt.	▪ Connect a PC Software Loader and load new software. See Appendix C. ▪ Cycle power or press Restart pushbutton again for less than 5 seconds to restart the Interface and clear the load request.
☆ OK (Slowblink) ❍ LAN (OFF) ❍ FDX (OFF) ❍ STAT (OFF)	**C** **Waiting for Configuration from PLC**	▪ Did not configure slot using PLC Programmer. ▪ New CPU with no configuration. ▪ CPU not communicating with Ethernet Interface ▪ (Condition can last a maximum of 2 minutes.)	▪ Use PLC Programmer configuration software to configure the Interface then store the configuration to the PLC CPU. ▪ Make sure Interface is in the correct slot on the baseplate. ▪ Power cycle the PLC. ▪ Clear faults and Restart Interface.
☆ OK (Slowblink) ●/*/❍ LAN (ON/Traffic/OFF) ❍ FDX (OFF/Slowblink) ☆ STAT (Slowblink) *OK and STAT blink in unison.*	**D** **Waiting for IP Address**	Interface's IP address has not been configured or has been configured as 0.0.0.0.	▪ Use PLC Programmer to configure the Interface with a non-zero IP address. ▪ Use a BOOTP server to provide Interface with a non-zero IP address.
☆ OK (Slowblink) ●/*/❍ LAN (ON/Traffic/OFF) ☆ FDX (Slowblink) ●/❍ STAT (ON/OFF) *OK and SER blink in unison.*	**E** **Maintenance**	▪ Restart pushbutton pressed until bottom two LEDs turn ON. ▪ Station Manager MAINT command issued. ▪ Internal System Error when Interface was Operational caused a restart and entrance into Maintenance.	▪ If you did not intend to enter Maintenance press the Restart pushbutton for less than 5 seconds. This clears the Maintenance request. ▪ Examine PLC Fault Table for clues.* ▪ If you need to use the Station Manager to troubleshoot a problem, see GFK-1186, TCP/IP Ethernet Communications for the Series 90 PLC Station Manager Manual.
● OK (ON) ●/*/❍ LAN (ON/Traffic/OFF) ●/❍ FDX (ON/OFF)[1] ●/❍ STAT (ON/OFF) [1] FDX should be ON if Full Duplex mode is activated; otherwise, it should be OFF.	**F** **Operational**	▪ If the LAN LED is OFF, the problem may be: ▪ Network cable or transceiver not connected to Interface or bad transceiver. ▪ Network cable not terminated properly. ▪ SQE not enabled on transceiver. ▪ If the STAT LED is OFF, an exception condition has occurred.	▪ Connect cable and transceiver properly. Replace transceiver. ▪ Terminate network cable properly. ▪ Set SQE ON on transceiver in accord with manufacturer's instructions. ▪ Examine PLC Fault Table to find out why the STAT LED is OFF. *

* Identify the PLC fault message using the PLC Programmer, then refer to Table 8-1 in Chapter 8 for corrective actions.

Pinging TCP/IP Ethernet Interfaces on the Network

PING (Packet InterNet Grouper) is the name of a program used on TCP/IP networks to test reachability of destinations by sending them an ICMP echo request message and waiting for a reply. Most nodes on TCP/IP networks, including the CMM321, implement a *PING* command.

You should *ping* each installed Ethernet Interface. When the Ethernet Interface responds to the *ping,* it verifies that the interface is operational and configured properly. Specifically, it verifies that acceptable TCP/IP configuration information has been stored to the Interface.

Pinging the Interface from a UNIX® host or a PC Running TCP/IP Software

A *ping* command can be executed from a UNIX host or PC running TCP/IP (since most TCP/IP communications software provides a *ping* command) or from another Ethernet Interface.* When using a PC or UNIX host, the user can refer to the documentation for the *ping* command, but in general all that is required is the IP address of the remote host as a parameter to the *ping* command. For example, at the command prompt type:

```
ping  10.0.0.1
```

Determining If an IP Address Has Already Been Used

It is very important not to duplicate IP addresses. To determine if you have configured your Ethernet Interface with the same IP address as another node:

1. Disconnect your Interface from the LAN.
2. Ping the disconnected Interface's IP address. If you get an answer to the ping, then the chosen IP address is already in use by another node. You *must* correct this situation by assigning unique IP addresses.

* To use another GE Fanuc Ethernet Interface, refer to the *PING* command in GFK-1186, *TCP/IP Ethernet Communications for the Series 90 PLC Station Manager Manual.*

® UNIX is a registered trademark exclusively licensed through X/Open Company LTD.

Installing an IC693CPU364 with Embedded TCP/IP Ethernet Interface

The CPU364 with Embedded Ethernet Interface is mounted on the Series 90-30 PLC baseplate. It is connected to an Ethernet network via a 10Base-T port or a user-provided transceiver cable and transceiver via an AAUI port.

IC693CPU364 Series 90-30 CPU Module with Ethernet Interface

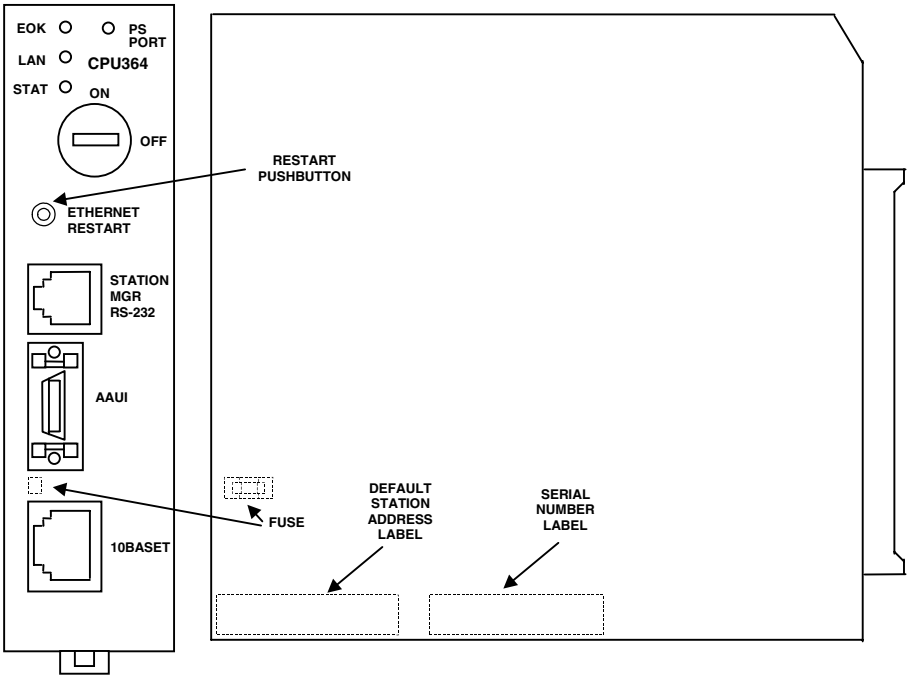

The Series 90-30 CPU364 has several user-accessible elements (only the Ethernet Interface elements are discussed here.)

Three Ethernet LEDs are located at the top left of the board. The Ethernet Restart pushbutton is located below the LEDs. The RS-232 serial port with the RJ-11 connector (similar to a modular telephone connector) is used to connect to Station Manager and to load software updates. Below the serial port are two ports, either one of which can be used to connect to the Ethernet network: the 14-pin AAUI connector (Transceiver port) and the 10Base-T, RJ-45 network port.

The default station address (MAC address) label, serial number label, and replaceable AAUI port fuse are concealed by the front cover. The front cover must be removed to access these items.

LEDs

There are four LEDs on the CPU364: EOK, LAN, STAT, and PS PORT (on some early models of the CPU364, the PS PORT LED is labeled "SNP"). The PS (Power Supply) PORT LED is not Ethernet related; it indicates the presence of serial traffic through the serial port of the PLC's power supply. Each of the three Ethernet LEDs (EOK, LAN, and STAT) can be ON, OFF, BLINKING slow, or BLINKING fast. They indicate the state of the Ethernet Interface, traffic on the network port (LAN LED), and that an exception event has occurred.

The three Ethernet LEDs are briefly turned ON whenever a restart is performed in the Operational state by pressing and releasing the Restart pushbutton (described below). This allows you to verify that the Ethernet LEDs are operational.

Ethernet Restart Pushbutton

The Ethernet Restart pushbutton serves four functions: LED test, Restart, Restart and enter Software Load state, and Restart and enter Maintenance state. These four functions behave similarly in all states except for the Software Load state. While in this state, pressing the pushbutton will cause an immediate restart into the Operational state (without performing the LED test) if the software in the Ethernet Interface has not been corrupted or erased. If the software has been corrupted or erased, pressing the pushbutton will cause an immediate restart back into the Software Load state. The following text describes Restart pushbutton behavior while not in the Software Load state.

Pressing the Ethernet Restart pushbutton will disrupt Ethernet communications.

LED Test: Any time the Ethernet Restart pushbutton is released, the three Ethernet LEDs flash ON. The operator should visually verify that the three LEDs go OFF and then ON at this time. Then the Interface performs either a restart, a restart and enter Software Load state, or a restart and enter Maintenance state, depending on the duration that you press the pushbutton.

Restart: Pressing the Ethernet Restart pushbutton momentarily (less than 5 seconds) requests a restart of the Ethernet Interface. When the Restart pushbutton is pressed, the three Ethernet LEDs go out. When it is released, the three Ethernet LEDs flash ON, then power-up diagnostics run, and the software on the Interface is restarted into the Operational state.

Restart and Enter Software Load State: Pressing and holding the Restart pushbutton until the bottom LED (STAT) turns ON (between 5 and 10 seconds) forces a restart and requests entrance to the Software Load state. A reload is used to install a software update into the module and is not part of normal operation. When the Restart pushbutton is pressed, all LEDs go out. After approximately 5 seconds have elapsed, the STAT LED (bottom LED) comes ON, to indicate that the Ethernet Interface will request a reload. After the Restart pushbutton is released, the three Ethernet LEDs flash ON, then power-up diagnostics run, and the Ethernet Interface waits for the software load with the three Ethernet LEDs blinking in unison.

Notes

Reloading the Ethernet Interface requires the attachment of the PC Software Loader to the RS-232, RJ-11 port and initiating a load with the PC Software Loader. The PC Software Loader is a separate software utility that updates the communications software in the Ethernet Interface. This utility is supplied with any updates to the Ethernet Interface software. See Appendix C, “Upgrading the Ethernet Interface Firmware”, for more information.

At any time before you initiate a load with the PC Software Loader when the Ethernet Interface is in the Software Load State, you can restart the Ethernet Interface by pressing the Restart pushbutton. Pressing this pushbutton will immediately cause the board to restart. If the reload has been initiated, see Appendix C, “Upgrading the Ethernet Interface Firmware”, for more information.

Restart and Enter Maintenance State: Pressing and holding the Restart pushbutton until the bottom two LEDs turn ON (approximately 10 seconds) forces a restart and requests entrance to the Maintenance state. Maintenance state must be invoked to change Advanced Parameters. While in Maintenance state, all Advanced Parameters revert to their default value. When the Restart pushbutton is pressed, all LEDs go out. After approximately 5 seconds, the STAT LED comes ON, then after approximately a total of 10 seconds have elapsed, the LAN LED also comes ON, to indicate that the Ethernet Interface will request entry to the Maintenance state. After the Restart pushbutton is released, the three Ethernet LEDs flash ON then power-up diagnostics run and the Ethernet Interface enters the Maintenance state.

Notes

In any case, any data being transferred by the Ethernet Interface at the time of the Restart will be lost.

The Restart pushbutton is not operable during the diagnostic phase of power-up. The Ethernet Interface is in diagnostic phase when the EOK LED is BLINKING fast and the other Ethernet LEDs are OFF.

Ports on the CPU364

RS-232, RJ-11 Port (Station Manager Port)

The Station Manager port uses a 6-pin, RJ-11 “phone jack” connector. This port is used to connect a terminal or terminal emulator to access the Station Manager software on the Ethernet Interface. It is also used to connect to the PC Software Loader in case the communications software in the Ethernet Interface needs to be updated. An IC693CBL316 cable (or equivalent) is needed to connect the terminal, emulator, or Software Loader to the Ethernet Interface (see Appendix B, “Communications Ports Characteristics”). On earlier versions of the CPU364 module, this port was labeled “Port 1 RS-232.”

Ethernet Ports

There are two Ethernet ports on the CPU364. Only one port can be used at a time. The Ethernet Interface automatically detects the Ethernet port in use; special configuration is not required.

AAUI (Transceiver) Port

The 14-pin AAUI port provides the electrical and mechanical interface to a user-provided IEEE 802.3 transceiver cable, which connects the AAUI Port to an external Ethernet-compatible transceiver (see Appendix B, “Communications Ports Characteristics”, for the characteristics of the AAUI Port and suggested transceivers). The external transceiver is directly connected to the Ethernet cable.

Caution

Do not connect or disconnect a transceiver cable to the AAUI port while power is applied to the PLC. This may blow the AAUI port fuse and/or cause permanent damage to the Ethernet Interface.

10Base-T, RJ-45 Port

This 8-pin, RJ-45 port provides a direct connection to a 10Base-T (twisted pair) Ethernet network without an external transceiver.

CPU364 Labels

Default Station Address Label

The Default Station Address label lists the MAC address to be used by this Interface.

Serial Number Label

The Serial Number Label indicates the serial number of this Interface.

Replaceable Surface Mount Fuse

A user-replaceable fuse is provided on the DC power that is supplied by the Ethernet Interface to the AAUI network port for use by an external transceiver. Replace only with a surface mount 2.69x2.69x6.1mm, 125V, 1A, fast-acting fuse (such as catalog number R454 001 made by LittelFuse; http://www.littelfuse.com). You may order this fuse from GE Fanuc. The part number is 44A725214-001.

Removing and Installing the Fuse

1. Be sure the Series 90-30 PLC baseplate power is OFF.
2. Remove the CPU364 module from the baseplate.
3. Remove the front shroud. The CPU364 is a two-board module, the fuse is located between the AAUI port and the 10Base-T port. See Figure 3-1.
4. Remove the blown fuse using a pair of small, bent-nose pliers.
5. Insert the new fuse. Make sure the fuse is seated properly.
6. Replace the front shroud and re-insert the CPU364 module.
7. Restore power to the baseplate.

Installing the CPU364 in the PLC

For general information about module and system installation, refer to GFK-0356, *Series 90-30 Programmable Controller Installation Manual*.

Equipment Required to Perform the Installation Procedures

Make sure you have the items listed below before you begin.

- A Series 90-30 PLC CPU baseplate with power supply. The Series 90-30 CPU364 requires PLC power supply IC693PWR321 (Revision K or later), IC693PWR322, or IC693PWR330.
- PLC programming software: Logic Developer (all versions), Control Version 2.01 or higher, VersaPro™ version 1.0 or higher, or Logicmaster 90-30 version 6.01 or higher. (And a compatible PC-compatible personal computer.)
- Ethernet cables and, if using the AAUI port, an Ethernet-compatible AAUI transceiver. (See Appendix B, "Communications Port Characteristics", for more information.)
- A serial cable for the Station Manager port on the Ethernet Interface (see Appendix B). ***Optional***
- A terminal or IBM-compatible personal computer equipped with terminal emulation software. ***Optional***

  Note: If your installation requires CE Mark compliance, please refer to GFK-1179, *Installation Requirements for Conformance to Standards*, for additional guidelines.

CPU364 Installation

Use the following instructions as a guide when inserting a module into a slot in a baseplate. These instructions assume that the power supply on the baseplate is to your left.

Warning

Do not insert or remove modules with power applied. This could cause the PLC to Stop, damage the module, or result in personal injury.

1. Be sure the Series 90-30 PLC baseplate power is OFF.
2. Align the module with the CPU's base slot (slot 1) and connector. Tilt the module upwards so that the top rear hook of the module engages the slot on baseplate.
3. Swing the module downward until the connectors mate and the lock-lever on the bottom of the module snaps into place engaging the baseplate notch.
4. Visually inspect the module to be sure that it is properly seated.
5. Connect *one* of the Ethernet ports on the Ethernet Interface to the network. If you are using an external transceiver, connect the transceiver cable to the 14-pin AAUI port of the Ethernet Interface. Secure the cable. The other end of the transceiver cable should be connected to an external IEEE 802.3 compatible transceiver which is attached to the Ethernet network. ***SQE must be enabled on the transceiver.*** (Note: The transceiver cable may be built-in to the transceiver or removable.)

Caution

Do not connect or disconnect a transceiver cable to the AAUI port while power is applied to the PLC. This may blow the AAUI port fuse and/or cause permanent damage to the Ethernet Interface.

6. Restore power to the baseplate.
7. Use the PLC programming software or a Hand Held Programmer to make sure the PLC CPU is in Stop mode.

CPU364 Configuration

Before you can use the Ethernet Interface with the Series 90-30 PLC, you must configure the Interface using the PLC programming software. The PLC programming software allows you to specify the modules and I/O that will reside in your Series 90-30 PLC rack(s). The Hand Held Programmer can *not* be used to configure the Ethernet Interface.

For the Ethernet Interface specifically, the configuration software allows you to:

- Define the Status address of the Ethernet Interface.
- Assign the IP address for the Ethernet Interface, and optionally the subnet mask, the gateway address, and the name server address.
- Configure the serial ports (optional).

Configuring the Interface Using Windows-Based Programming Software.

To configure the Ethernet Interface using Logic Developer, Control or VersaPro™ programming software, do the following:

1. In Control and VersaPro™, from the Browser, double-click Hardware Configuration icon. The Local Rack Window will appear. In Logic Developer, expand the hardware configuration and the main rack in the browser.
2. In Control and VersaPro™, click the Main tab.
3. Click the CPU slot, press the right mouse button, and choose Replace Module. The Module Catalog dialog box will appear.
4. In the Module Catalog dialog box, select CPU model IC693CPU364, then click the OK button. Follow the instructions on the screen until the Parameters dialog box appears.
5. The Parameters dialog box will allow you to edit the module's parameters. To edit a parameter value, click the desired tab, then click in the appropriate Values field. The Settings, Scan, and Memory tabs contain parameters that pertain directly to CPU operation. Refer to Online Help for more information.
6. The Ethernet and RS-232 tabs contain parameters directly related to the embedded Ethernet Interface's functionality. Some fields in the Ethernet tab must be filled in. The default settings for the RS-232 tabs can be used. Refer to the topic "Configuration Parameters" that follows for information on these fields. We recommend leaving the serial port parameters at default settings.
7. If you want to view the power consumption of this module, click the Power Consumption tab. After you have configured all of the module's applicable parameters, click the OK button. The module will now appear in the selected slot.
8. Store the configuration to the PLC so these settings can take effect.

For more information, refer to Online Help in the PLC programming software.

Configuring the Interface Using the Logicmaster 90-30 Configuration Software

To configure the Ethernet Interface, access the I/O Configuration rack screen in the Logicmaster 90-30 Configuration Package, and do the following:

1. Move the cursor to the CPU slot (slot1) and press **Zoom** (**`F10`**) to access the CPU configuration screen.
2. If the current CPU is the CPU364, continue to step 3. Otherwise, press **CPU** (**`F1`**) to access the CPU selection menu. Use the arrow keys to highlight the CPU364 (IC693CPU364), press **Enter** to select it, and then press **Y** to replace the module.
3. The initial configuration screen contains the actual CPU configuration parameters. Press **Page Down** to access the configuration screens for the Ethernet Interface (Ethernet parameters and RS-232 serial port parameters).
4. Configure the Ethernet parameters. Refer to the topic "Configuration Parameters" that follows for more information on these fields.
5. Optionally, after you have assigned the Ethernet parameters, press **Page Down** to display the serial port parameters. You can then change the default settings of the serial ports (optional). Refer to the topic "Configuration Parameters" that follows for more information on these fields. We recommend leaving the serial port parameters at default settings.
6. After you have completed the configuration, press the **Escape** key to return to the rack display. Press **Escape** again to save the configuration to disk.
7. Store the configuration to the PLC so these settings can take effect.

Refer to GFK-0466, *Logicmaster 90 Series 90-30/20/Micro Programming Software User's Manual* for more information on configuring the Ethernet Interface using Logicmaster 90-30 software.

CPU364 Configuration Parameters

Ethernet Parameters

Configuration Mode: This is fixed as TCP/IP.

Adapter Name: A symbolic name representation of the associated IP address. The character set is listed in Chapter 6, "Network Administration Support". The Adapter Name is associated with the IP address used in Ethernet Global Data. If supported in the PLC programming software, view all adapter names in Hardware Configuration by going to the Edit menu, choosing Rack Operations, and selecting Name Resolution. Adapter names are listed in the Adapter Names tab.

Status Address: The Status Reference Type is the location of the LAN Interface Status (LIS) bits (16 bits) and the Channel Status bits (64 bits). The Channel Status bits are always located immediately following the LAN Interface Status bits. The Status address can be assigned to %I, %Q, %R, %AI or %AQ memory. The default value is the next available %I address.

Note

Do not use the 80-bits assigned to the LIS bits and Channel Status bits for other purposes or your data will be overwritten.

Status Length: This is the sum of the LIS bits and the Channel Status bits. This value is automatically set to either 80 bits (for %I and %Q Status address locations) or 5 words (for %R, %AI, and %AQ Status address locations).

IP Address, Subnet Mask, Gateway IP Address, and Name Server IP Address: These values should be assigned by the person in charge of your network (the network administrator). TCP/IP network administrators are familiar with these parameters. It is important that these parameters are correct; otherwise, the Ethernet Interface may be unable to communicate on the network and/or network operation may be corrupted. It is especially important that each node on the network is assigned a *unique* IP address.

However, if you have no network administrator and are using a simple *isolated network* with no gateways, you can use the following range of values for the assignment of local IP addresses:

10.0.0.1	First PLC
10.0.0.2	Second PLC
10.0.0.3	Third PLC
.	.
.	.
.	.
10.0.0.255	PLC Programmer TCP or host

Also, in this case, set the subnet mask, gateway IP address, and name server IP address to 0.0.0.0.

Note

If the isolated network is ever connected to another network, the IP addresses 10.0.0.1 through 10.0.0.255 must not be used and the subnet mask, gateway IP address, and name server IP address must be assigned by the network administrator. The IP addresses must be assigned so that they are compatible with the connected network. Refer to Chapter 6, “Network Administration Support”, for more information on addressing.

See also “Determining If an IP Address Has Already Been Used” in this section.

Network Time Sync: Selection of the method used to synchronize the real-time clocks over the network. Currently the choices are None/DISABLED (for no network time synchronization) and SNTP/ENABLED (for synchronization to remote SNTP servers on the network).

AAUI Transceiver Power (Watts): Allows you to account for the power consumption added by the AAUI Transceiver attached to the Ethernet module (measured in Watts). The valid range is 0.0 to 2.00. The default value is 0.0.

Serial Port Parameters

These parameters are for the RS-232, RJ-11 serial port on the CPU364 module. This port is used for both the Station Manager connection *and* for connecting to the Software Loader. The Software Loader settings take effect automatically when the Ethernet Interface enters the "Software Load" state. For all other states the Station Manager settings take effect. Refer to "Verifying Proper Power-Up of the Ethernet Interface", for more information on states of the Ethernet Interface.

Data Rate (bps): Data rate (bits per second) for the port. Choices are 300, 600, 1200, 2400, 4800, 9600‡, or 19200*.

Parity: Type of parity to be used for the port. Choices are None‡, Even, or Odd*.

Stop Bits: Enter the number of stop bits. Choices are 1*‡ or 2.

Flow Control: Type of flow control to be used for the port. Choices are Hardware, Software, or None*‡. The Software selection has no effect.

Modem TT (Turnaround Delay): Turnaround delay time to be used for the port. The value entered is the number of 10 ms increments for the Turnaround delay. Choices are 0*‡-255. (e.g. a value of 100 will provide a 1000 ms, or 1 second, Turnaround delay)

Timeout: This parameter is currently not used by the Ethernet Interface. Changing this parameter has no effect.

* Default selection for the Software Loader Port.
‡ Default selection for the Station Manager Port.

Verifying Proper Power-Up of the CPU364 Ethernet Interface

After configuring the Ethernet Interface, follow the procedure below to verify that the Ethernet Interface is operating correctly.

1. Turn power OFF to the PLC for 3–5 seconds, then turn the power back ON. This will initiate a series of diagnostic tests.

   The EOK LED will blink indicating the progress of power-up.

2. The Ethernet LEDs will have the following pattern upon successful power-up. At this time the Ethernet Interface is fully operational and on-line.

LED	Ethernet Interface Online
EOK	● (ON)
LAN	●/✲ (ON/Traffic)
STAT	● (ON)

If the STAT LED is OFF, check the PLC Fault Table. Alternatively, use the Station Manager LOG command as explained in GFK-1186, *TCP/IP Ethernet Communications for the Series 90 PLC Station Manager Manual*.

Problems During Power-up

If a problem is detected during power-up, the Ethernet Interface may not transition directly to the Operational State. If the Interface does not transition to Operational, check the LED pattern on the Interface and refer to the following chart and table for corrective actions.

States of the Series 90-30 CPU364 with Embedded TCP/IP Ethernet Interface

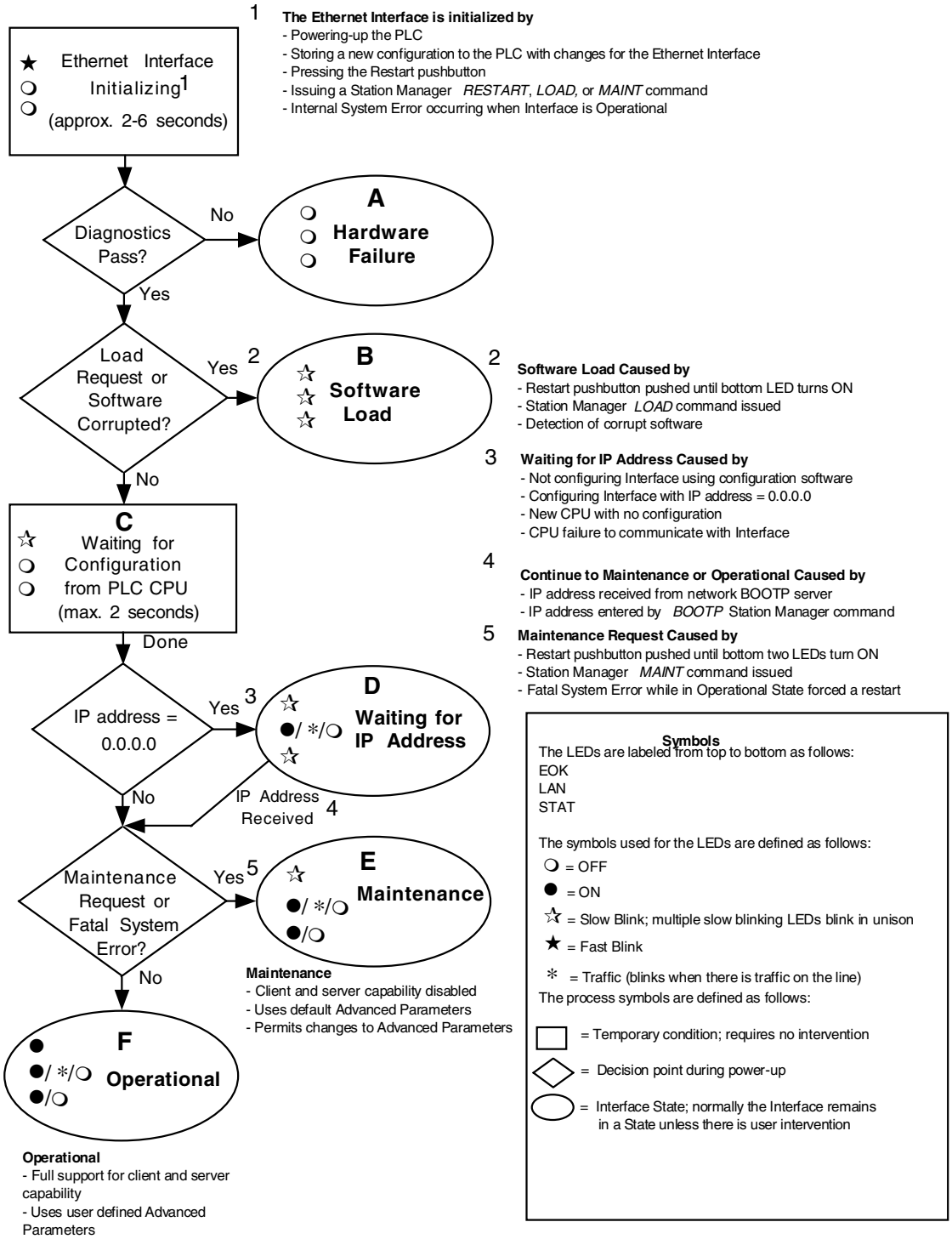

LED Pattern	Where Stopped	Possible Cause	Corrective Actions
❍ EOK (OFF) ❍ LAN (OFF) ❍ STAT (OFF)	**A** **Hardware Failure**	Fatal Hardware Error.	▪ Make sure the PLC has power. ▪ Examine PLC Fault Table for clues. ▪ Recheck PLC Programmer configuration. ▪ Power off baseplate, inspect the Interface for loose components, reseat the module, and Restart. ▪ If the problem persists, replace the PLC hardware.
☆ EOK (Slowblink) ☆ LAN (Slowblink) ☆ STAT (Slowblink) *All LEDs blink in unison.*	**B** **Software Loader**	▪ Restart pushbutton until the bottom LED turns ON. ▪ Station Manager LOAD command issued. ▪ Software corrupt.	▪ Connect a PC Software Loader and load new software. See Appendix C. ▪ Cycle power or press Restart pushbutton again for less than 5 seconds to restart the Interface and clear the load request.
☆ EOK (Slowblink) ❍ LAN (OFF) ❍ STAT (OFF)	**C** **Waiting for Configuration from PLC**	▪ Did not configure slot using the PLC Programmer. ▪ CPU not communicating with Ethernet Interface. ▪ (Condition can last a maximum of 2 seconds.)	▪ Use the PLC Programmer configuration software to configure the Interface then store the configuration to the PLC CPU. ▪ Power cycle the PLC. ▪ Clear faults and Restart Interface.
☆ EOK (Slowblink) ●/✲/❍ LAN (ON/Traffic/OFF) ☆ STAT (Slowblink) *EOK and STAT blink in unison.*	**D** **Waiting for IP Address**	Interface's IP address has not been configured or has been configured as 0.0.0.0.	▪ Use the PLC Programmer to configure the Interface with a non-zero IP address. ▪ Use a BOOTP server to provide Interface with a non-zero IP address.
☆ EOK (Slowblink) ●/✲/❍ LAN (ON/Traffic/OFF) ●/❍ STAT(ON/OFF)	**E** **Maintenance**	▪ Restart pushbutton until the bottom two LEDs turn ON. ▪ Station Manager MAINT command issued. ▪ Internal System Error when Interface was Operational caused a restart and entrance into Maintenance.	▪ If you did not intend to enter Maintenance press the Restart pushbutton for less than 5 seconds. This clears the Maintenance request. ▪ Examine PLC Fault Table for clues. ▪ If you need to use the Station Manager to troubleshoot a problem, see GFK-1186, TCP/IP Ethernet Communications for the Series 90 PLC Station Manager Manual.
●EOK (ON) ●/✲/❍ LAN (ON/Traffic/OFF) ●/❍ STAT(ON/OFF)	**F** **Operational**	If the LAN LED is OFF, the problem may be: ▪ Network cable not connected or transceiver not connected to Interface or bad transceiver. ▪ Network cable not terminated properly. ▪ SQE not enabled on transceiver. If the STAT LED is OFF, an exception condition has occurred.	▪ Connect cable and transceiver properly. Replace transceiver. ▪ Terminate network cable properly. ▪ Set SQE ON on transceiver in accord with manufacturer's instructions. ▪ Examine PLC Fault Table to find out why the STAT LED is OFF.

Pinging TCP/IP Ethernet Interfaces on the Network

PING (Packet InterNet Grouper) is the name of a program used on TCP/IP networks to test reachability of destinations by sending them an ICMP echo request message and waiting for a reply. Most nodes on TCP/IP networks, including the Series 90-30 CPU364, implement a *PING* command.

You should *ping* each installed Ethernet Interface. When the Ethernet Interface responds to the *ping,* it verifies that the interface is operational and configured properly. Specifically it verifies that acceptable TCP/IP configuration information has been stored to the Interface.

Pinging the Interface from a UNIX® Host or a PC Running TCP/IP Software

A *ping* command can be executed from a UNIX host or PC running TCP/IP (since most TCP/IP communications software provides a *ping* command) or from another Ethernet Interface.* When using a PC or UNIX host, the user can refer to the documentation for the *ping* command, but in general all that is required is the IP address of the remote host as a parameter to the *ping* command. For example, at the command prompt type:

```
ping  10.0.0.1
```

Determining If an IP Address Has Already Been Used

It is very important not to duplicate IP addresses. To determine if you have configured your Ethernet Interface with the same IP address as another node:

1. Disconnect your Interface from the LAN.
2. Ping the disconnected Interface's IP address. If you get an answer to the ping, then the chosen IP address is already in use by another node. You *must* correct this situation by assigning unique IP addresses.

* To use another GE Fanuc Ethernet Interface, refer to the *PING* command in GFK-1186, *TCP/IP Ethernet Communications for the Series 90 PLC Station Manager Manual.*

® UNIX is a registered trademark exclusively licensed through X/Open Company LTD.

Installing an IC693 CPU374 with Embedded TCP/IP Ethernet Interface

The CPU374 with Embedded Ethernet Interface is mounted on the Series 90-30 PLC baseplate. It is connected to an Ethernet network via either or both of its auto-sensing 10Base-T/ 100Base TX ports.

IC693CPU374 Series 90-30 CPU Module with Ethernet Interface

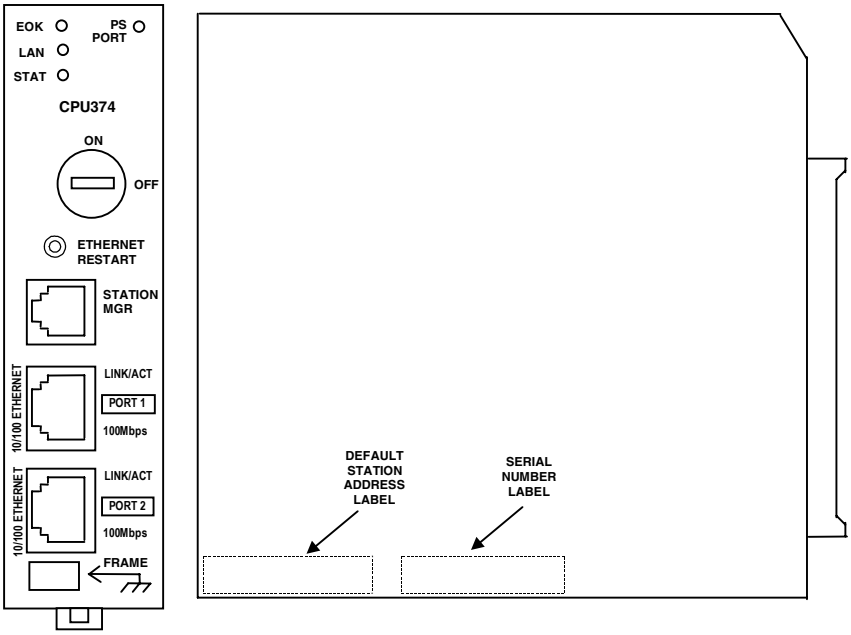

The Series 90-30 CPU374 has several user-accessible elements (only the Ethernet Interface's applicable elements are discussed here.)

Three Ethernet LEDs are located at the top left of the module. The Ethernet Restart pushbutton is located below the LEDs. The RS-232 serial port with the RJ-11 connector (similar to a modular telephone connector) is used to connect to Station Manager. Below the serial port are twoRJ-45 ports, either or both of which can be used to connect to the Ethernet network..

The default station address (MAC address) label is located on the outside of the module.

LEDs

There are eight LEDs on the CPU374. Four of these LEDs: EOK, LAN, STAT, and PS PORT give module status information. Four LEDS are associated with the two RJ-45 ports. The PS (Power Supply) PORT LED is not Ethernet related; it indicates the presence of serial traffic through the serial port of the PLC's power supply. Each of the three Ethernet LEDs (EOK, LAN, and STAT) can be ON, OFF, BLINKING slow, or BLINKING fast. They indicate the state of the Ethernet Interface, traffic at the Ethernet Interface (LAN LED), and that an exception event has occurred.

The seven Ethernet LEDs are briefly turned ON whenever a restart is performed in the Operational state by pressing and releasing the Restart pushbutton (described below). This allows you to verify that the Ethernet LEDs are operational.

Each RJ-45 port has two green LED indicators on it. The upper indicator, labeled LINK/ACT, lights when the link is physically present and blinks when traffic is detected on the port. Traffic at the port does not necessarily mean that traffic is present at the Ethernet Interface, because the traffic can be going between the two ports of the switch. The lower indicator, labeled 100MBPS, lights if the network connection is 100Mbps.

See "Verifying Proper Power-Up of the Ethernet Interface" for more LED information.

Ethernet Restart Pushbutton

The Ethernet Restart pushbutton serves two functions: LED test and Restart. These functions behave similarly in all states.

Pressing the Ethernet Restart pushbutton will disrupt Ethernet communications (including any communications to other devices attached to the embedded switch).

LED Test: Any time the Ethernet Restart pushbutton is pressed, the seven Ethernet LEDs flash ON. The operator should visually verify that the LEDs go OFF and then ON at this time. Then the Interface performs a restart.

Restart: Pressing the Ethernet Restart pushbutton requests a restart of the Ethernet Interface. When the Restart pushbutton is pressed, the seven Ethernet LEDs go out then flash ON, then power-up diagnostics run, and the software on the Interface is restarted into the Operational state.

Ports on the CPU374

RS-232, RJ-11 Port (Station Manager Port)

The RS-232, 6-pin, RJ-11 "phone jack" port is used to connect a terminal or terminal emulator to access the Station Manager software on the Ethernet Interface. A cable is needed to connect the terminal, emulator, or Software Loader to the Ethernet Interface (see Appendix B, "Communications Ports Characteristics").

Ethernet Ports

There are two RJ-45 Ethernet ports on the Ethernet Interface. Either or both of these ports may be attached to other Ethernet devices. Each port automatically senses the data rate (10Mbps or 100Mbps), duplex (half duplex or full duplex), and cabling arrangement (straight through or crossover) of the attached link.

Caution

The two ports on the Ethernet Interface must not be connected, directly or indirectly to the same device. The hub or switch connections in an Ethernet network must form a tree, otherwise duplication of packets may result.

CPU374 Labels

Default Station Address Label

The Default Station Address label lists the MAC address to be used by this Interface.

Serial Number Label

The Serial Number Label indicates the serial number of this Interface.

Installing the CPU374 in the PLC

For general information about module and system installation, refer to GFK-0356, *Series 90-30 Programmable Controller Installation Manual*.

Equipment Required to Perform the Installation Procedures

Make sure you have the items listed below before you begin.

- A Series 90-30 PLC CPU baseplate with power supply. The Series 90-30 CPU374 requires PLC power supply IC693PWR321, (Revision K or later), IC693PWR322, or IC693PWR330. A high capacity Power Supply is recommended as the 374 uses about 60% of a standard Power Supply's capacity.
- PLC programming software: Logic Developer Version 2.60 or higher, Control Version 2.01 or higher, or VersaPro™ version 2.03 or higher. (And a compatible PC-compatible personal computer.)
- Ethernet cables.
- A serial cable for the Station Manager port on the Ethernet Interface (see Appendix B). ***Optional***
- A terminal or IBM-compatible personal computer equipped with terminal emulation software. ***Optional***

Note

If your installation requires CE Mark compliance, please refer to GFK-1179, *Installation Requirements for Conformance to Standards*, shipped with the PLC programming software, for additional guidelines.

CPU374 Installation

Use the following instructions as a guide when inserting a module into a slot in a baseplate. These instructions assume that the power supply on the baseplate is to your left.

Warning

Do not insert or remove modules with power applied. This could cause the PLC to Stop, damage the module, or result in personal injury.

1. Be sure the Series 90-30 PLC baseplate power is OFF.
2. Align the module with the CPU's base slot (slot 1) and connector. Tilt the module upwards so that the top rear hook of the module engages the slot on baseplate.
3. Swing the module downward until the connectors mate and the lock-lever on the bottom of the module snaps into place engaging the baseplate notch.
4. Visually inspect the module to be sure that it is properly seated.
5. Connect one or both of the Ethernet ports on the Ethernet Interface to the network.
6. Restore power to the baseplate.
7. Use the PLC programming software or a Hand Held Programmer to make sure the PLC CPU is in Stop mode.

CPU374 Configuration

Before you can use the Ethernet Interface with the Series 90-30 PLC, you must configure the Interface using the PLC programming software. The PLC programming software allows you to specify the modules and I/O that will reside in your Series 90-30 PLC rack(s). The Hand Held Programmer can *not* be used to configure the Ethernet Interface.

For the Ethernet Interface specifically, the configuration software allows you to:

- Define the Status address of the Ethernet Interface.
- Assign the IP address for the Ethernet Interface, and optionally the subnet mask, the gateway address, and the name server address.
- Configure the serial ports (optional).

Configuring the Interface Using Windows-Based Programming Software.

To configure the Ethernet Interface using Logic Developer, Control, or VersaPro™ programming software, do the following:

1. In Control and VersaPro™, from the Browser, double-click Hardware Configuration icon. The Local Rack Window will appear. In Logic Developer, expand the hardware configuration and the main rack in the browser.
2. In Control and VersaPro™, click the Main tab.
3. Click the CPU slot, press the right mouse button, and choose Replace Module. The Module Catalog dialog box will appear.
4. In the Module Catalog dialog box, select CPU model IC693CPU374, then click the OK button. Follow the instructions on the screen until the Parameters dialog box appears.
5. The Parameters dialog box will allow you to edit the module's parameters. To edit a parameter value, click the desired tab, then click in the appropriate Values field. The Settings, Scan, and Memory tabs contain parameters that pertain directly to CPU operation. Refer to Online Help for more information.
6. The Ethernet and RS-232 tabs contain parameters directly related to the embedded Ethernet Interface's functionality. Some fields in the Ethernet tab must be filled in. The default settings for the RS-232 tabs can be used. Refer to the topic "Configuration Parameters" that follows for information on these fields. We recommend leaving the serial port parameters at default settings.
7. If you want to view the power consumption of this module, click the Power Consumption tab. After you have configured all of the module's applicable parameters, click the OK button. The module will now appear in the selected slot.
8. Store the configuration to the PLC so these settings can take effect.

For more information, refer to Online Help in the PLC programming software.

CPU374 Configuration Parameters

Ethernet Parameters

Configuration Mode: This is fixed as TCP/IP.

Adapter Name: This field is set to 0.1 (the rack and slot of the Ethernet Interface) and cannot be changed.

Status Address: The Status Reference Type is the location of the LAN Interface Status (LIS) bits (16 bits) and the Channel Status bits (64 bits). The Channel Status bits are always located immediately following the LAN Interface Status bits. The Status address can be assigned to %I, %Q, %R, %AI or %AQ memory. The default value is the next available %I address.

Note

Do not use the 80-bits assigned to the LIS bits and Channel Status bits for other purposes or your data will be overwritten.

Status Length: This is the sum of the LIS bits and the Channel Status bits. This value is automatically set to either 80 bits (for %I and %Q Status address locations) or 5 words (for %R, %AI, and %AQ Status address locations).

IP Address, Subnet Mask, and Gateway IP Address : These values should be assigned by the person in charge of your network (the network administrator). TCP/IP network administrators are familiar with these parameters. It is important that these parameters are correct; otherwise, the Ethernet Interface may be unable to communicate on the network and/or network operation may be corrupted. It is especially important that each node on the network is assigned a *unique* IP address.

However, if you have no network administrator and are using a simple *isolated network* with no gateways, you can use the following range of values for the assignment of local IP addresses:

10.0.0.1	First PLC
10.0.0.2	Second PLC
10.0.0.3	Third PLC
.	.
.	.
.	.
10.0.0.255	PLC Programmer TCP or host

Also, in this case, set the subnet mask, and gateway IP address to 0.0.0.0.

Note

If the isolated network is ever connected to another network, the IP addresses 10.0.0.1 through 10.0.0.255 must not be used and the subnet mask,and gateway IP address must be assigned by the network administrator. The IP addresses must be assigned so that they are compatible with the connected network. Refer to Chapter 6, "Network Administration Support", for more information on addressing.

See also "Determining If an IP Address Has Already Been Used".

Network Time Sync: Selection of the method used to synchronize the real-time clocks over the network. Currently the choices are None/DISABLED (for no network time synchronization) and SNTP/ENABLED (for synchronization to remote SNTP servers on the network).

Serial Port Parameters

These parameters are for the RS-232, RJ-11 serial port on the Ethernet Interface. This port is used for the Station Manager connection.

Data Rate (bps): Data rate (bits per second) for the port. Choices are 1200**,** 2400**,** 4800**,** 9600**,** or 19200**.**

Parity: Type of parity to be used for the port. Choices are None‡, Even, or Odd*.

Flow Control: Type of flow control to be used for the port. Choices are Hardware, Software, or None. The Software selection has no effect.

Advanced User Parameters

Advanced User Parameters may be set for the Ethernet Interface by creating an AUP file and putting it into the folder for the PLC application.

The AUP file is a text file, created by any convenient text editor. The file name must be "AUP_0_1.APF". The first line of the file must consist only of the text: "AUP_0_1". Subsequent lines in the file many contain assignments for Advanced User Parameter values using the syntax: <parameter name>=value

There should be no space between the parameter name and the equal or between the equal and the value. Parameter names are the same as described in GFK-1186, *TCP/IP Ethernet Communications for the Series 90 PLC, Station Manager Manual*, in the description of the PARM command.

Parameter values are converted to lowercase unless enclosed in a pair of double quotes; the parameter value data depends on the parameter. Numeric parameters are entered in decimal or hexadecimal format; hexadecimal values must be terminated with an 'h' or 'H' character. IP address parameters must be entered in standard dotted decimal format. Character string values are case-sensitive; as with Station Manager commands uppercase parameter values must be enclosed within a pair of double quotes.

The semicolon character delimits comments; all characters in the line following a semicolon are ignored. An entire line may be ignored by inserting a semicolon as the first character in the line. A blank line is also ignored.

Caution

The IEEE 802.3 standard strongly discourages the manal configuration of duplex mode for a port (as would be possible using Advanced User Parameters.) Before manually configuring duplex mode for a port using AUP, be sure that you know the characteristics of the link partner and are aware of the consequences of your selection. In the words of the IEEE standard: "Connecting incompatible DTE/MAU combinations such as full duplex mode DTE to a half duplex MAU, or a full-duplex station (DTE or MAU) to a repeater or other half duplex network, can lead to severe network performance degradation, increased collisions, ate collisions, CRC errors, and undetected data corruption."

Note

If speed and duplex mode of a port is forced using AUP, the switch will no longer perform automatic cable detection. This means that if you have the switch port connected to a switch or hub port you must use a crossover cable. If you have the switch port connected to the uplink port on a switch or hub or if you have the switch port connected to another Ethernet device you must use a normal cable.

An example AUP file for the CPU374 to set the IP "Time to Live (TTL)" parameter to the value 5 is shown below. This text would appear in a file named "AUP_0_1.AUP" in the directory of the folder for the PLC:

```
AUP_0_1
;
; Set IP TTL to 5  ;
ittl=5
```

Verifying Proper Power-Up of the CPU374 Ethernet Interface

After configuring the Interface, follow the procedure below to verify that the Ethernet Interface is operating correctly.

1. Turn power OFF to the PLC for 3–5 seconds, then turn the power back ON. This will initiate a series of diagnostic tests.

   The EOK LED will blink indicating the progress of power-up.

2. The Ethernet LEDs will have the following pattern upon successful power-up. At this time the Ethernet Interface is fully operational and on-line.

LED	Ethernet Interface Online
EOK	● (ON)
LAN	●/✲ (ON/Traffic)
STAT	● (ON)

If STAT LED is OFF, check the PLC Fault Table. Alternatively, use the Station Manager LOG command as explained in GFK-1186, *TCP/IP Ethernet Communications for the Series 90 PLC Station Manager Manual*.

Problems During Power-up

If a problem is detected during power-up, the Ethernet Interface may not transition directly to the Operational State. If the Interface does not transition to Operational, check the LED pattern on the Interface and refer to the following chart and table for corrective action.

States of the Series 90-30 CPU374 with Embedded TCP/IP Ethernet Interface

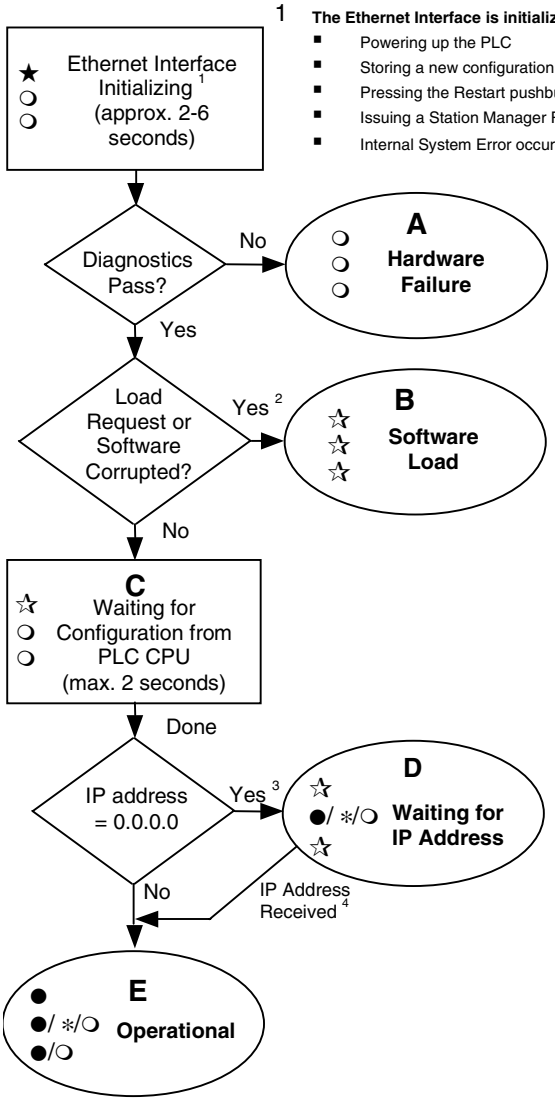

1 **The Ethernet Interface is initialized by**

- Powering up the PLC
- Storing a new configuration to the PLC with changes for the Ethernet Interface
- Pressing the Restart pushbutton
- Issuing a Station Manager RESTART command
- Internal System Error occurring when Interface is operational

2 **Software Load caused by**

- Pressing the Restart pushbutton
- Detection of corrupt software

3 **Waiting for IP Address caused by**

- Not configuring Interface using configuration software
- Configuring Interface with IP Address = 0.0.0.0
- New CPU with no configuration
- CPU failure to communication with Interface

4 **Continue to Operational State caused by**

- IP Address received over network

Operational

- Full support for client and server capanility
- Uses user-defined Advanced Parameters

Symbols

The LEDs are labeled from top to bottom as follows:
EOK
LAN
STAT

❍	The symbols use for the LEDS i the chart are: OFF
●	ON
☆	Slow Blink; multiple slow blinking LEDS blink in unison
★	Fast Blink
✻	Traffic (blinks when there is traffic on the line.
	The process symbols use in this chart are:
▭	Temporary condition; requires no intervention
◇	Decision point during powerup
⬭	Interface State; normally the Interface remains in a state unless there is user intervention.

LED Pattern	Where Stopped	Possible Cause	Corrective Actions
❍ EOK (OFF) ❍ LAN (OFF) ❍ STAT (OFF)	**A** **Hardware Failure**	Fatal Hardware Error.	▪ Make sure the PLC has power. ▪ Examine PLC Fault Table for clues. ▪ Recheck PLC Programmer configuration. ▪ Power off baseplate, inspect the Interface for loose components, reseat the module, and Restart. ▪ If the problem persists, replace the PLC hardware.
☆ EOK (Slowblink) ☆ LAN (Slowblink) ☆ STAT (Slowblink) *All LEDs blink in unison.*	**B** **Software Loader**	Software corrupt.	Connect a PC Software Loader and load new software. See Appendix C.
☆ EOK (Slowblink) ❍ LAN (OFF) ❍ STAT (OFF)	**C** **Waiting for Configuration from PLC**	▪ Did not configure slot using the PLC Programmer. ▪ CPU not communicating with Ethernet Interface. (Condition can last a maximum of 2 seconds.)	▪ Use the PLC Programmer configuration software to configure the Interface then store the configuration to the PLC CPU. ▪ Power cycle the PLC. ▪ Clear faults and Restart Interface.
☆ EOK (Slowblink) ●/✲/❍ LAN (ON/Traffic/OFF) ☆ STAT (Slowblink) *EOK and STAT blink in unison.*	**D** **Waiting for IP Address**	Interface's IP address has not been configured or has been configured as 0.0.0.0.	▪ Use the PLC Programmer to configure the Interface with a non-zero IP address. ▪ Assign IP address over network
●EOK (ON) ●/✲/❍ LAN (ON/Traffic/OFF) ●/❍ STAT(ON/OFF)	**E** **Operational**	▪ If the LAN LED is OFF, the problem may be network cable not connected ▪ If the STAT LED is OFF, an exception condition has occurred.	▪ Connect cable. ▪ Examine PLC Fault Table to find out why the STAT LED is OFF.

Pinging TCP/IP Ethernet Interfaces on the Network

PING (Packet InterNet Grouper) is the name of a program used on TCP/IP networks to test reachability of destinations by sending them an ICMP echo request message and waiting for a reply. Most nodes on TCP/IP networks, including the Series 90-30 CPU374, implement a *PING* command.

You should *ping* each installed Ethernet Interface. When the Ethernet Interface responds to the *ping,* it verifies that the interface is operational and configured properly. Specifically it verifies that acceptable TCP/IP configuration information has been stored to the Interface.

Pinging the Interface from a UNIX® Host or a PC Running TCP/IP Software

A *ping* command can be executed from a UNIX host or PC running TCP/IP (since most TCP/IP communications software provides a *ping* command) or from another Ethernet Interface.* When using a PC or UNIX host, the user can refer to the documentation for the *ping* command, but in general all that is required is the IP address of the remote host as a parameter to the *ping* command. For example, at the command prompt type:

```
ping  10.0.0.1
```

Determining If an IP Address Has Already Been Used

It is very important not to duplicate IP addresses. To determine if you have configured your Ethernet Interface with the same IP address as another node:

1. Disconnect your Interface from the LAN.
3. Ping the disconnected Interface's IP address. If you get an answer to the ping, then the chosen IP address is already in use by another node. You *must* correct this situation by assigning unique IP addresses.

* To use another GE Fanuc Ethernet Interface, refer to the *PING* command in GFK-1186, *TCP/IP Ethernet Communications for the Series 90 PLC Station Manager Manual.*

® UNIX is a registered trademark exclusively licensed through X/Open Company LTD.

Installing the IC697CMM742 Ethernet Interface

The IC697CMM742 Ethernet Interface is mounted in a Series 90-70 PLC rack. It is connected to an Ethernet network via a 10Base-T port, a 10Base2 port, or a user-provided transceiver cable and transceiver via an AUI port.

IC697CMM742 Ethernet Interface

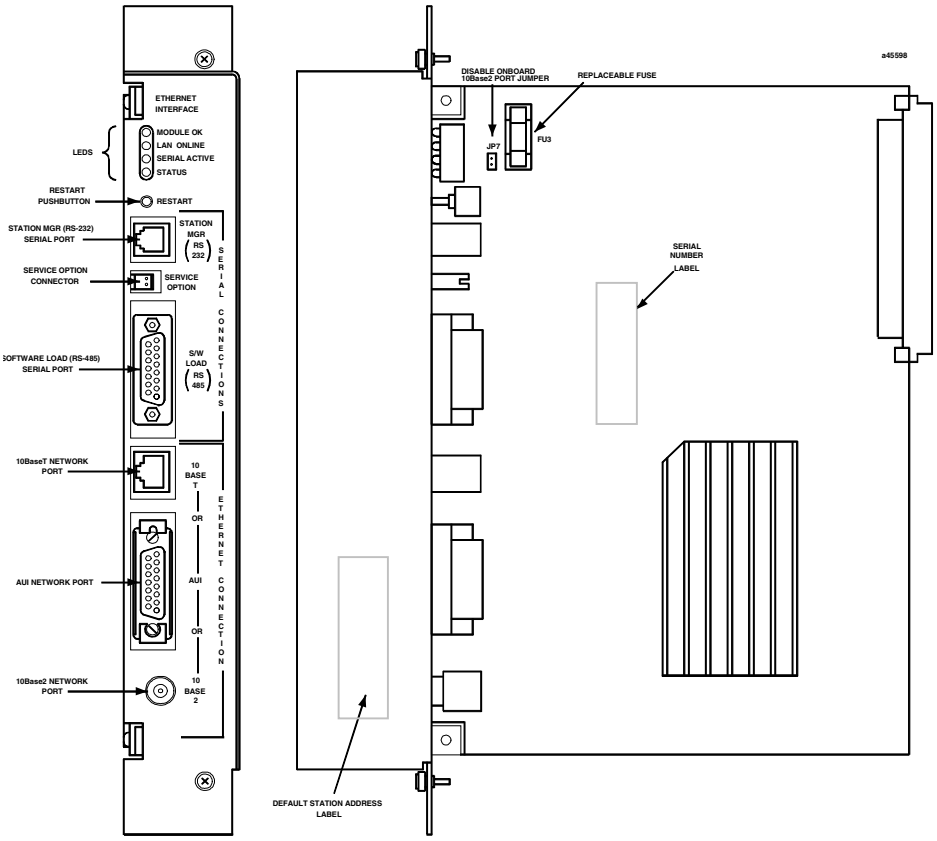

The CMM742 has several user-accessible elements.

Four LEDs are located at the top of the board. The Restart pushbutton is located immediately below the LEDs. The RS-232 serial port with the RJ-11 connector (similar to a modular telephone connector) is the Station Manager port. The RS-485 serial port with the 15-pin “D” connector located immediately below the Station Manager port is the module’s Software Loader port. Below these there are three ports, any one of which can be used to connect to the Ethernet network: the 10Base-T, RJ-45 port, the AUI port, and the 10Base2, BNC port.

LEDs

There are four LEDs on the Ethernet Interface: MODULE OK, LAN ONLINE, SERIAL ACTIVE, and STATUS. Each of these LEDs can be ON, OFF, BLINKING slow, or BLINKING fast. They indicate the state of the Interface, traffic on the network port (LAN ONLINE LED), and that an exception event has occurred.

All LEDs are briefly turned ON whenever a restart is performed in the Operational state by pressing and releasing the Restart pushbutton (described below). This allows you to verify that all LEDs are operational.

See "Verifying Proper Power-Up of the Ethernet Interface" for more LED information.

Ethernet Restart Pushbutton

The Restart pushbutton serves four functions: LED test, Restart, Restart and enter Software Load state, and Restart and enter Maintenance state. These four functions behave similarly in all states except for the Software Load state. While in this state, pressing the pushbutton will cause an immediate restart into the Operational state (without performing the LED test) if the software in the Ethernet Interface has not been corrupted or erased. If the software has been corrupted or erased, pressing the pushbutton will cause an immediate restart back into the Software Load state. The following text describes Restart pushbutton behavior while not in the Software Load state.

Pressing the Restart pushbutton will disrupt Ethernet communications.

LED Test: Any time the Restart pushbutton is released *all* the LEDs flash ON. You should visually verify that all the LEDs go OFF and then ON at this time. Then the Interface performs either a restart, a restart and enter Software Load state, or a restart and enter Maintenance state, depending on the duration that you press the pushbutton.

Restart: Pressing the Restart pushbutton momentarily (less than 5 seconds) requests a restart of the Ethernet Interface. When the Restart pushbutton is pressed, all LEDs go out. When it is released, all LEDs flash ON, then power-up diagnostics run, and the software on the Interface is restarted into the Operational state.

Restart and Enter Software Load State: Pressing and holding the Restart pushbutton until the bottom LED (STATUS) turns ON (between 5 and 10 seconds) forces a restart and requests entrance to the Software Load state. A reload is used to install a software update into the module and is not part of normal operation. When the Restart pushbutton is pressed, all LEDs go out. After approximately 5 seconds have elapsed, the STATUS LED (bottom LED) comes ON, to indicate that the Ethernet Interface will request a reload. After the Restart pushbutton is released, all LEDs flash ON, then power-up diagnostics run, and the Ethernet Interface waits for the software load with all LEDs blinking in unison.

Note

Reloading the Ethernet Interface requires the attachment of the PC Software Loader to the Software Loader port and initiating a load with the PC Software Loader. The PC Software Loader is a separate software utility that updates the communications software in the Ethernet Interface. This utility is supplied with any updates to the Ethernet Interface software. See Appendix C, "Upgrading the Ethernet Interface Firmware", for more information.

Note

At any time before you initiate a load with the PC Software Loader when the Ethernet Interface is in the Software Load state, you can restart the Ethernet Interface by pressing the Restart pushbutton. Pressing this pushbutton will immediately cause the board to restart. If the reload has been initiated, see Appendix C, "Upgrading the Ethernet Interface Firmware", for more information.

Restart and Enter Maintenance State: Pressing and holding the Restart pushbutton until the bottom two LEDs turn ON (approximately 10 seconds) forces a restart and requests entrance to the Maintenance state. Maintenance state must be invoked to change Advanced Parameters. While in Maintenance state, all Advanced Parameters revert to their default value. When the Restart pushbutton is pressed, all LEDs go out. After approximately 5 seconds, the STATUS LED comes ON, then after approximately a total of 10 seconds have elapsed, the SERIAL ACTIVE LED also comes ON, to indicate that the Ethernet Interface will request entry to the Maintenance state. After the Restart pushbutton is released, all LEDs flash ON then power-up diagnostics run and the Ethernet Interface enters the Maintenance state.

Notes

In any case, any data being transferred by the Ethernet Interface at the time of the Restart will be lost.

The Restart pushbutton is not operable during the diagnostic phase of power-up. The Ethernet Interface is in diagnostic phase when the MODULE OK LED is BLINKING fast and other LEDs are OFF.

Service Option Connector

If a problem occurs with the Ethernet Interface that requires continuous removal of power from the rack or its removal from the rack, the on-board log event data will automatically be preserved for 2–3 days. The service option connector allows you to attach a standard battery (IC697ACC701) to save the log event data for longer periods.

Ports on the CMM742

There are two serial ports on the Ethernet Interface: the Station Manager port (RS-232) and the Software Loader port (RS-485).

RS-232, RJ-11 Port (Station Manager Port)

The RS-232, 6-pin, RJ-11 “phone jack”, port is used to connect a terminal or terminal emulator to access the Station Manager software on the Ethernet Interface. A cable is needed to connect the terminal or emulator to the Ethernet Interface (see Appendix B, “Communications Ports Characteristics”).

RS-485, D-Type Port (Software Loader Port)

The RS-485, 15-pin, D-type port is used to connect to the PC Software Loader in case the communications software in the Ethernet Interface needs to be updated. The characteristics of this port are given in Appendix B, “Communications Ports Characteristics”.

Ethernet Ports

There are three Ethernet ports on the Ethernet Interface. Only one Ethernet port may be used at a time. The Ethernet Interface automatically detects the Ethernet port in use; special configuration is not required. (See also the topic "Disable Onboard 10Base2 Port Jumper" below.)

Caution

Do not connect or disconnect a transceiver or network cable to the AUI or BNC ports while power is applied to the PLC. This may blow the port fuse and/or cause permanent damage to the Ethernet Interface.

10BaseT Port

This 8-pin, RJ-45 port provides a direct connection to a 10Base-T (twisted pair) Ethernet network without an external transceiver.

AUI Port

This 15-pin, D-type AUI port with slide-lock provides the electrical and mechanical interface to the user-provided IEEE 802.3 transceiver cable, which connects the AUI Port to an external Ethernet compatible transceiver (see Appendix B, "Communications Ports Characteristics", for the characteristics of the AUI port). The external transceiver is directly connected to the Ethernet cable.

10Base2, BNC Port

This BNC port provides a direct connection to a 10Base2 (thin wire) Ethernet network without an external transceiver.

CMM742 Labels

Default Station Address Label

The Default Station Address label lists the MAC address to be used by this Interface.

Disable Onboard 10Base2 Port Jumper

This jumper ("JP7") must be in place to ensure proper network operation only when using an external AUI transceiver connected to the AUI port that is ***externally*** powered. This jumper is normally not installed.

Replaceable +12VDC Fuse

A user-replaceable fuse (FU3) is provided on the +12VDC power that is supplied by the Ethernet Interface to the AUI network port for use by an external transceiver. Replace only with a 5 x 20mm, 250V, 1 A, fast-acting fuse.

Installing the CMM742 in the PLC

For general information about module and system installation, refer to GFK-0262, *Series 90-70 Programmable Controller Installation Manual*.

Equipment Required to Perform the Installation Procedures

Make sure you have the items listed below before you begin.

- Series 90-70 PLC rack.
- Series 90-70 power supply.
  - To use the AUI port, the power supply must be one of the following types, which provide +12 Vdc for an external transceiver on the AUI port: IC697PWR711, IC697PWR724, or IC697PWR748.
  - If the AUI port will not be used, +5 Vdc is all that is required. Under these conditions, power supply IC697PWR710 is sufficient.
- A Series 90-70 CPU.
- PLC programming software: Logicmaster 90-70 version 6.02 or higher or Control version 1.0 or higher (runs on a personal computer).
- Ethernet cables and, if using the AUI port, an Ethernet-compatible AUI transceiver. (See Appendix B, “Communications Ports Characteristics”, for more information.)
- A serial cable for the Station Manager port on the Ethernet Interface (see Appendix B). ***Optional***
- A terminal or IBM-compatible personal computer equipped with terminal emulation software. ***Optional***
- A Phillips-head screwdriver.

Note

If your installation requires CE Mark compliance, please refer to GFK-1179, *Installation Requirements for Conformance to Standards*, shipped with the PLC programming software, for additional guidelines.

CMM742 Installation

This section describes the physical mounting of the Ethernet Interface into the Series 90-70 PLC rack. For information on the installation procedures for the rack, Series 90-70 CPU, Power Supply, and other Series 90-70 modules, refer to GFK-0262, *Series 90-70 Programmable Controller Installation Manual*.

Warning

Do not insert or remove modules with power applied. This could cause the PLC to Stop, damage the module, or result in personal injury.

1. Be sure the Series 90-70 PLC rack power is OFF.
2. Slide the Ethernet Interface into the desired slot—normally the first available slot to the right of the CPU.

   Press firmly to seat the Interface, but do not force the Interface. Tighten the screws on the top and bottom tabs.

Note

The Series 90-70 Ethernet Interface (Type 2) must be installed in the main rack; installation in an expansion rack is not supported. The Ethernet Interface will not operate properly if there are empty slots to the left of the slot you select.

3. Connect *one* of the Ethernet ports on the Ethernet Interface to the network. If you are using an external transceiver, connect the transceiver cable to the AUI port on the Ethernet Interface. The other end of the transceiver cable should be connected to an external IEEE 802.3 compatible transceiver that is attached to the Ethernet network. ***SQE must be enabled on the transceiver.***

Caution

Do not connect or disconnect a transceiver or network cable to the AUI or BNC ports while power is applied to the PLC. This may blow the port fuse and/or cause permanent damage to the Ethernet Interface.

4. Set the CPU Run/Stop switch to STOP.

CMM742 Configuration

Before you can use the Ethernet Interface with the Series 90-70 PLC, you must configure the Interface using the PLC programming software. The PLC configuration software allows you to specify the modules and I/O that will reside in your Series 90-70 PLC rack(s).

For the Ethernet Interface specifically, the configuration software allows you to:

- Define the Status address of the Ethernet Interface.
- Assign the IP address for the Ethernet Interface, and optionally the subnet mask, the gateway address, and the name server address.
- Configure the serial ports (optional).

Configuring the Interface Using Windows-Based Programming Software

To configure the Ethernet Interface using Logic Developer, Control, or VersaPro™ programming software, do the following:

1. In Control and VersaPro™, from the Browser, double-click the 90-70 Rack System–Local Rack icon. The Local Rack Window will appear. In Logic Developer, expand the hardware configuration and the desired rack in the browser.
2. In Control and VersaPro™, click the tab corresponding to the desired rack.
3. Click the desired slot, press the right mouse button, and choose Add Module from the menu. (If the slot already contains a module, choose Replace Module.) The Module Catalog dialog box will appear.
4. In the Module Catalog dialog box, click the Communications tab, select IC697CMM742 Ethernet Controller Type 2, and then click the OK button. The Parameters dialog box then will appear.
5. This dialog box will allow you to edit the module's Ethernet parameters. To edit a parameter value, click in the appropriate Values field.
6. Optionally, after you have completed the Settings tab, you can configure parameters for the Station Manager and Software Load ports by clicking the appropriate tab. The default settings for the serial ports can then be changed (optional). Refer to the topic "Configuration Parameters" that follows for information on these fields. We recommend leaving the serial port parameters at default settings.
7. If you want to view the power consumption of this module, click the Power Consumption tab. After you have configured all of the module's applicable parameters, click the OK button. The module will now appear in the selected slot.
8. Store the configuration to the PLC so these settings can take effect.

For more information, refer to Online Help in the PLC programming software.

Configuring the Interface Using Logicmaster 90-70 Configuration Software

To configure the Ethernet Interface, access the I/O Configuration rack screen in the Logicmaster 90-70 Configuration Package, and do the following:

1. Move the cursor to the desired rack and slot location. The slot may be either unconfigured or previously configured.
2. Press the **Communications** softkey, i.e., **Comm** (`F6`)
3. Press **ethnet** (`F2`).
4. Press "↓" (down arrow) to highlight "IC697CMM742", then press **Enter** to select the Ethernet Interface.
5. Configure the Ethernet parameters. Refer to the topic "Configuration Parameters" that follows for more information on these fields.
6. Optionally, after you have assigned the Ethernet parameters, press **Page Down** to display the serial port parameters. You can then change the default settings of the serial ports (optional). Refer to the topic "Configuration Parameters" that follows for more information on these fields. We recommend leaving the serial port parameters at default settings.
7. After you have completed the configuration, press the **Escape** key to return to the rack display. Press **Escape** again to save the configuration to disk.
8. Store the configuration to the PLC so these settings can take effect.

Refer to GFK-0263, *Logicmaster 90-70 Programming Software User's Manual* for more information on using Logicmaster 90-70 software.

CMM742 Configuration Parameters

Ethernet Parameters

Configuration Mode: This is fixed as TCP/IP.

Adapter Name: A symbolic name representation of the associated IP Address. The character set is listed in Chapter 6, "Network Administration Support". The Adapter Name is associated with the IP address used in Ethernet Global Data. If supported in the PLC programming software, view all adapter names in Hardware Configuration by going to the Edit menu, choosing Rack Operations, and selecting Name Resolution. Adapter names are listed in the Adapter Names tab.

IP Address, Subnet Mask, Gateway IP Address, and Name Server IP Address: These values should be assigned by the person in charge of your network (the network administrator). TCP/IP network administrators are familiar with these parameters. It is important that these parameters are correct, otherwise the Ethernet Interface may be unable to communicate on the network and/or network operation may be corrupted. It is especially important that each node on the network is assigned a *unique* IP address.

However, if you have no network administrator and are using a simple *isolated network* with no gateways, you can use the following range of values for the assignment of local IP addresses:

10.0.0.1	First PLC
10.0.0.2	Second PLC
10.0.0.3	Third PLC
.	.
	.
10.0.0.255	PLC Programmer TCP or host

Also, in this case, set the subnet mask, gateway IP address, and name server IP address to 0.0.0.0.

Note

If the isolated network is ever connected to another network, the IP addresses 10.0.0.1 through 10.0.0.255 must not be used and the subnet mask, gateway IP address, and name server address must be assigned by the network administrator. The IP addresses must be assigned so that they are compatible with the connected network. Refer to Chapter 6, "Network Administration Support", for more information on addressing.

See also "Determining If an IP Address Has Already Been Used".

Status Address: The Status Reference Type is the location of the LAN Interface Status (LIS) bits (16 bits) and the Channel Status bits (64 bits). The Channel Status bits are always located immediately following the LAN Interface Status bits. The Status address can be assigned to %I, %Q, %R, %AI, or %AQ memory. The default value is the next available %I address.

Note

Do not use the 80 bits assigned to the LIS bits and Channel Status bits for other purposes or your data will be overwritten.

Status Length: This is the sum of the LIS bits and the Channel Status bits. This value is automatically set to either 80 bits (for %I and %Q Status address locations) or 5 words (for %R, %AI, and %AQ Status address locations).

Network Routing Pair #1, #2, #3: These parameters are used to define an IP routing partnership with another network adapter within the same PLC system. Network routing pairs is an advanced feature that should be set only by individuals who have detailed knowledge of PLC communications.

Network Time Sync: Selection of the method used to synchronize the real-time clocks over the network. Currently the choices are None (for no network time synchronization) and SNTP (for synchronization to remote SNTP servers on the network).

Serial Port Parameters

Data Rate (bps): Data rate (bits per second) for the port. Choices are 300, 600, 1200, 2400, 4800, 9600‡, or 19200*.

Parity: Type of parity to be used for the port. Choices are None‡, Even, or Odd*.

Stop Bits: Enter the number of stop bits. Choices are 1*‡ or 2.

Flow Control: This parameter is currently not used by the Ethernet Interface. Changing this parameter has no effect.

Turnaround Delay: Turnaround delay time (in milliseconds) to be used for the port. Choices are None*‡, 10 ms, 100 ms, or 500 ms.

Timeout: This parameter is currently not used by the Ethernet Interface. Changing this parameter has no effect.

* Default selection for the Software Loader Port.
‡ Default selection for the Station Manager Port.

Verifying Proper Power-Up of the CMM742

After configuring the Interface, follow the procedure below to verify that the Ethernet Interface is operating correctly.

1. Turn power OFF to the PLC for 3–5 seconds, then turn the power back ON. This will initiate a series of diagnostic tests.

   The MODULE OK LED will blink indicating the progress of power-up.

2. The LEDs will have the following pattern upon successful power-up. At this time the Ethernet Interface is fully operational and on-line.

LED	Ethernet Interface Online
MODULE OK	● (ON)
LAN ONLINE	●/✲ (ON/Traffic)
SERIAL ACTIVE	❍ (OFF)
STATUS	● (ON)

If the STATUS LED is OFF, check the PLC Fault Table. Alternatively, use the Station Manager LOG command as explained in GFK-1186, *TCP/IP Ethernet Communications for the Series 90 PLC Station Manager Manual*.

Problems During Power-up

If a problem is detected during power-up, the Ethernet Interface may not transition directly to the Operational state. If the Interface does not transition to Operational, check the LED pattern on the Interface and refer to the following chart and table for corrective action.

States of the Series 90-70 CMM742 TCP/IP Ethernet Interface

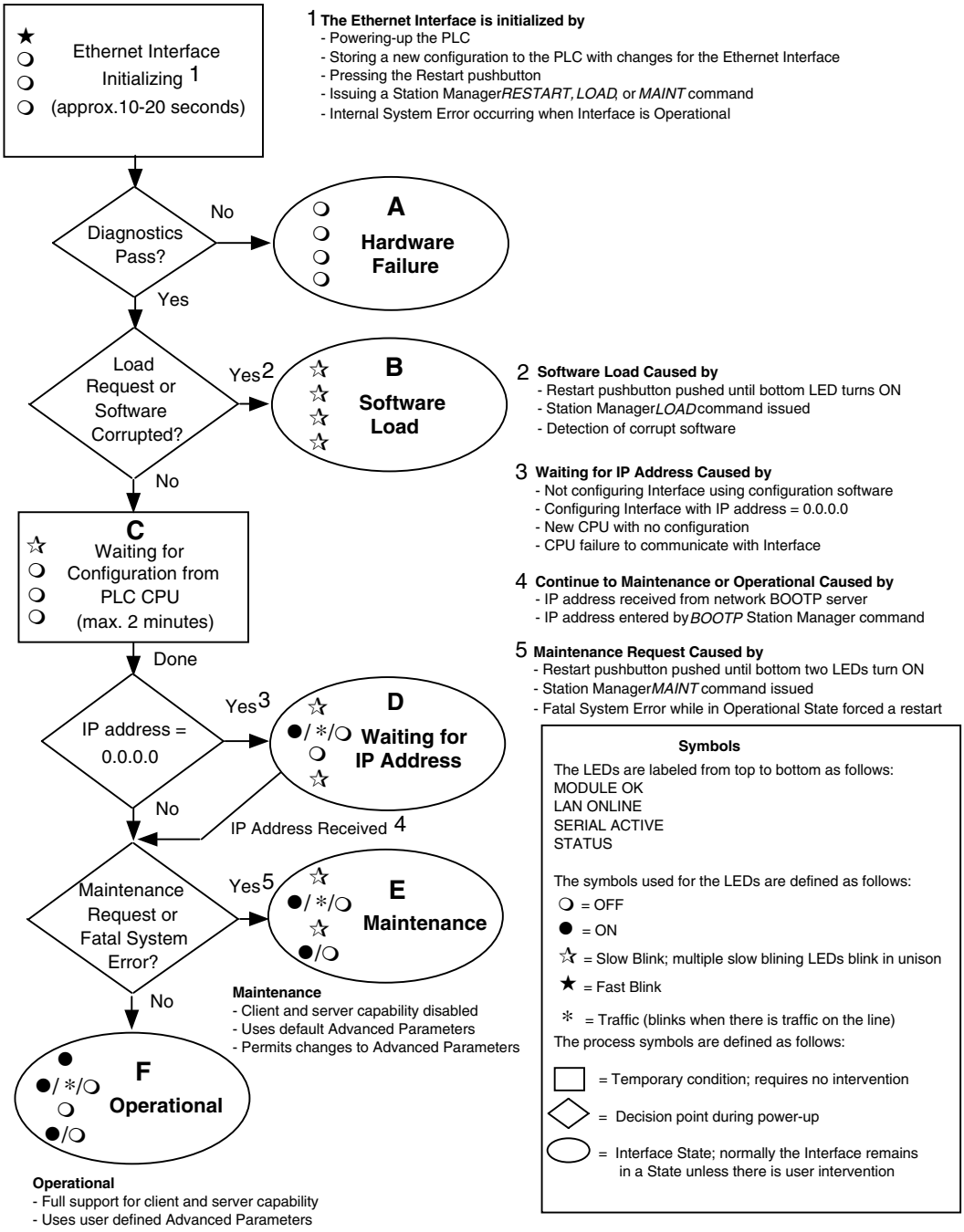

LED Pattern	Where Stopped	Possible Cause	Corrective Actions
❍ MODULE OK OFF) ❍ LAN ONLINE (OFF) ❍ SERIAL ACTIVE (OFF) ❍ STATUS (OFF)	**A** **Hardware Failure**	Fatal Hardware Error.	▪ Make sure the PLC has power. ▪ Examine PLC Fault Table for clues.* ▪ Recheck PLC Programmer configuration. ▪ Power off the PLC rack, inspect the Interface for loose components, reseat the Interface, and Restart. ▪ Try a different slot. ▪ If the problem persists, replace the Interface or PLC hardware.
☆ MODULE OK (Slowblink) ☆ LAN ONLINE (Slowblink) ☆ SERIAL ACT. (Slowblink) ☆ STATUS (Slowblink) *All LEDs blink in unison.*	**B** **Software Loader**	▪ Restart pushbutton until the bottom LED turns ON. ▪ Station Manager LOAD command issued. ▪ Software corrupt.	▪ Connect a PC Software Loader and load new software. See Appendix C. ▪ Cycle power or press Restart pushbutton again for less than 5 seconds to restart the Interface and clear the load request.
☆ MODULE OK (Slowblink) ❍ LAN ONLINE (OFF) ❍ SERIAL ACT. (OFF) ❍ Status (OFF)	**C** **Waiting for Configuration from PLC**	▪ Did not configure slot using PLC Programmer. ▪ New CPU with no configuration. ▪ CPU not communicating with Ethernet Interface ▪ (Condition can last a maximum of 2 minutes.)	▪ Use configuration software to configure the Interface then store the configuration to the PLC CPU. ▪ Make sure Interface is in the correct slot on the in the PLC rack. ▪ Power cycle the PLC. ▪ Clear faults and Restart Interface.
☆ MODULE OK (Slowblink) ●/✲/❍ LAN ONL. (ON/Traffic/OFF) ❍ SER. ACT (OFF/Slowblink) ☆ STAT US (Slowblink) *MODULE OK and STATUS blink in unison.*	**D** **Waiting for IP Address**	Interface's IP address has not been configured or has been configured as 0.0.0.0.	▪ Use PLC Programmer configuration software to configure the Interface with a non-zero IP address. ▪ Use a BOOTP server to provide Interface with a non-zero IP Address.
☆ MODULE OK (Slowblink) ●/✲/❍ LAN ONL. (ON/Traffic/OFF) ☆ SERIAL ACT. (Slowblink) ●/❍ STATUS (ON/OFF) *MODULE OK and SERIAL ACTIVE blink in unison.*	**E** **Maintenance**	▪ Restart pushbutton until bottom two LEDs turn ON. ▪ Station Manager MAINT command issued. ▪ Internal System Error when Interface was Operational caused a restart and entrance into Maintenance.	▪ If you did not intend to enter Maintenance, press the Restart pushbutton for less than 5 seconds. This clears the Maintenance request. ▪ Examine PLC Fault Table for clues.* ▪ If you need to use the Station Manager to troubleshoot a problem, see GFK-1186, TCP/IP Ethernet Communications for the Series 90 PLC Station Manager Manual.
● MODULE OK (ON) ●/✲/❍ LAN ONL. (ON/Traffic/OFF) ❍ SERIAL ACTIVE (OFF) ●/❍ STATUS (ON/OFF)	**F** **Operational**	If the LAN ONLINE LED is OFF, the problem may be: ▪ Network cable not connected or transceiver not connected to Interface or bad transceiver. ▪ Network cable not terminated properly. ▪ SQE not enabled on transceiver. If the STATUS LED is OFF, an exception condition has occurred.	▪ ▪ Connect cable and transceiver properly. Replace transceiver. ▪ Terminate network cable properly. ▪ Set SQE ON on transceiver in accord with manufacturer's instructions. ▪ Examine PLC Fault Table to find out why the STATUS LED is OFF. *

Pinging TCP/IP Ethernet Interfaces on the Network

PING (Packet InterNet Grouper) is the name of a program used on TCP/IP networks to test reachability of destinations by sending them an ICMP echo request message and waiting for a reply. Most nodes on TCP/IP networks, including the Series 90-70 Ethernet Interface (Type 2), implement a *PING* command.

The user should *ping* each installed Ethernet Interface. When the Ethernet Interface responds to the *ping,* it verifies that the interface is operational and configured properly. Specifically it verifies that acceptable TCP/IP configuration information has been stored to the Interface.

Pinging the Interface from a UNIX® Host or a PC Running TCP/IP Software

A *ping* command can be executed from a UNIX host or PC running TCP/IP (since most TCP/IP communications software provides a *ping* command) or from another Ethernet Interface.* When using a PC or UNIX host, the user can refer to the documentation for the *ping* command, but in general, all that is required is the IP address of the remote host as a parameter to the *ping* command. For example, at the command prompt type:

```
ping  10.0.0.1
```

Determining if an IP Address Has Already Been Used

It is very important not to duplicate IP addresses. To determine if you have configured your Ethernet Interface with the same IP address as another node:

1. Disconnect your Interface from the LAN.
2. Ping the disconnected Interface's IP address. If you get an answer to the ping, then the chosen IP address is already in use by another node. You *must* correct this situation by assigning unique IP addresses.

* To use another GE Fanuc Ethernet Interface, refer to the PING command in GFK-1186, *TCP/IP Ethernet Communications for the Series 90 PLC Station Manager Manual*.

® UNIX is a registered trademark exclusively licensed through X/Open Company LTD.

Chapter 3 Programming SRTP Channel Commands

This chapter describes how to program PLC to PLC communications over the Ethernet network using SRTP Channel commands. To program Modbus/TCP Channel commands, see chapter 4.

- The Communications Request
- The COMMREQ Function Block and Command Block
- SRTP Channel Commands
- Status Data
- Controlling Communications in the Ladder Program, which includes an example

Note

This chapter applies *only* to PLCs being used as client PLCs to *initiate* SRTP/TCP/IP communications. No programming is required for SRTP server operations.

The Communications Request

This section describes the elements of the Communications Request.

No programming of Communications Requests is required for PLCs acting as servers which are merely targets of other systems' requests but do not themselves initiate requests.

Structure of the Communications Request

The Communications Request is made up of the following elements:

- The COMMREQ Function Block (ladder instruction)
- The COMMREQ Command Block
- The Channel Command
- Status Data (COMMREQ Status word, LAN Interface Statusand Channel Status bits)
- The logic program controlling execution of the COMMREQ Function Block

Elements of the Communications Request

The figure below illustrates the relationship of these elements:

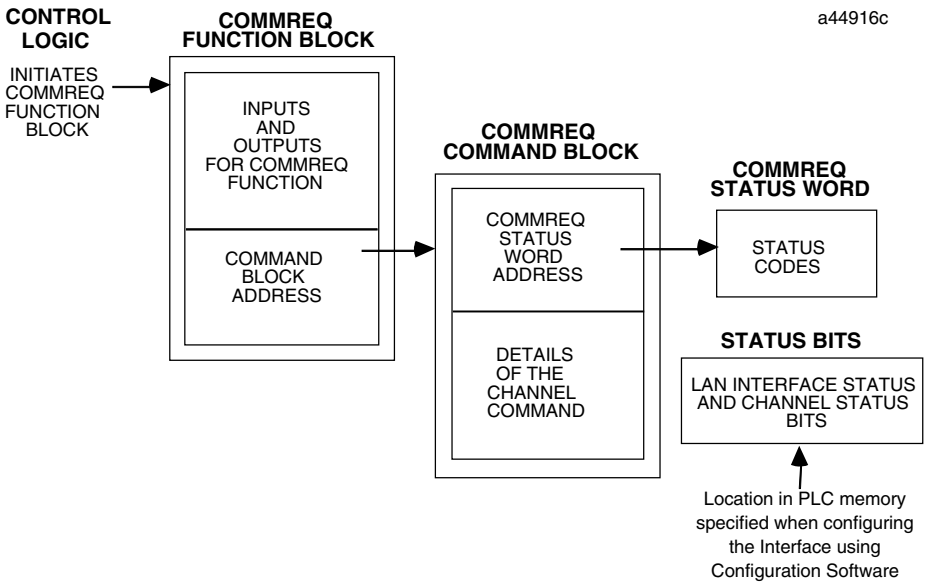

COMMREQ Function Block

The COMMREQ Function Block is the ladder instruction that triggers the execution of the Channel command. In the COMMREQ Function Block, you specify the rack and slot location of the Ethernet Interface, a task value, and the address of a location in memory that contains the Command Block. There is also a fault output on the COMMREQ Function Block that indicates certain programming errors.

COMMREQ Command Block

The COMMREQ Command Block is a structure that contains information about the Channel command to be executed. The Command Block consists of two parts:

Common Area - includes the address of the COMMREQ Status word (CRS word).

Data Block Area - describes the Channel command to be executed.

When the COMMREQ function is initiated, the Command Block is transferred to the Ethernet Interface for action.

SRTP Channel Commands

The Channel commands are a set of client PLC commands used to communicate with a server PLC.

Advantages of Channel Commands

The advantage of Channel commands is their ability to establish a channel to execute multiple *periodic* reads or writes with a single initiation of a COMMREQ function. A Channel command can also be used to execute a single read or write.

- Up to 32 channels (numbered 1–32) can be established by a Series 90-70 Ethernet Interface.
- Up to 16 channels (numbered 1–16) can be established by a Series 90-30 Ethernet Interface. (If the Series 90-30 Ethernet Interface supports Modbus/TCP Channels, the 16 available channels are shared between SRTP and Modbus/TCP.)

The channel number is specified in the Command Block for the Channel command. The channel can be monitored using the Channel Status bits and the Detailed Channel Status words.

Status Data

There are several types of status data available to the client PLC logic program.

LAN Interface Status Bits (LIS Bits): The LIS bits comprise bits 1–16 of the 80-bit status area. The location of this 80-bit status area is assigned using the Configuration software in the "Status Address" field. The LIS bits contain information on the status of the Local Area Network (LAN) and the Ethernet Interface itself.

Channel Status Bits: The Channel Status bits comprise bits 17–80 (64 bits) of the 80-bit status area. When used for SRTP channels, these bits consist of an *error* bit and a *data transfer* bit for each of the channels that can be established (32 channels for the Series 90-70 Ethernet Interface, 16 channels for the Series 90-30 Ethernet Interfaces). Status bits for unused channels are always set to zero.

COMMREQ Status Word (CRS Word): The 16-bit CRS word will receive the initial status of the communication request. The location of the CRS word is assigned for each COMMREQ function in the COMMREQ Command Block.

Detailed Channel Status Words (DCS Words): This detailed status data is retrieved for a particular channel using the Retrieve Detailed Channel Status Command.

FT Output of the COMMREQ Function Block: This output indicates that the PLC CPU detected errors in the COMMREQ Function Block and/or Command Block and did not pass the Command Block to the Ethernet Interface.

The Logic Program Controlling Execution of the COMMREQ Function Block

Care must be taken in developing the logic that controls the execution of the COMMREQ function. The COMMREQ function must be initiated by a one-shot to prevent the COMMREQ from being executed repeatedly each CPU scan, as this will overrun the capability of the Ethernet Interface and possibly require a manual restart. Checking certain status bits before initiating a COMMREQ function is also important. In particular, the LAN Interface OK bit should be used as an interlock to prevent execution of the COMMREQ function when the Ethernet Interface is not operational. Following initiation of a COMMREQ on a channel, no further COMMREQs should be issued to that channel until a non-zero CRS word has been returned to the program from the Ethernet Interface.

Operation of the Communications Request

The figure and text below explains how a Communications Request is executed. The figure specifically illustrates the successful operation of an Establish Read Channel command.

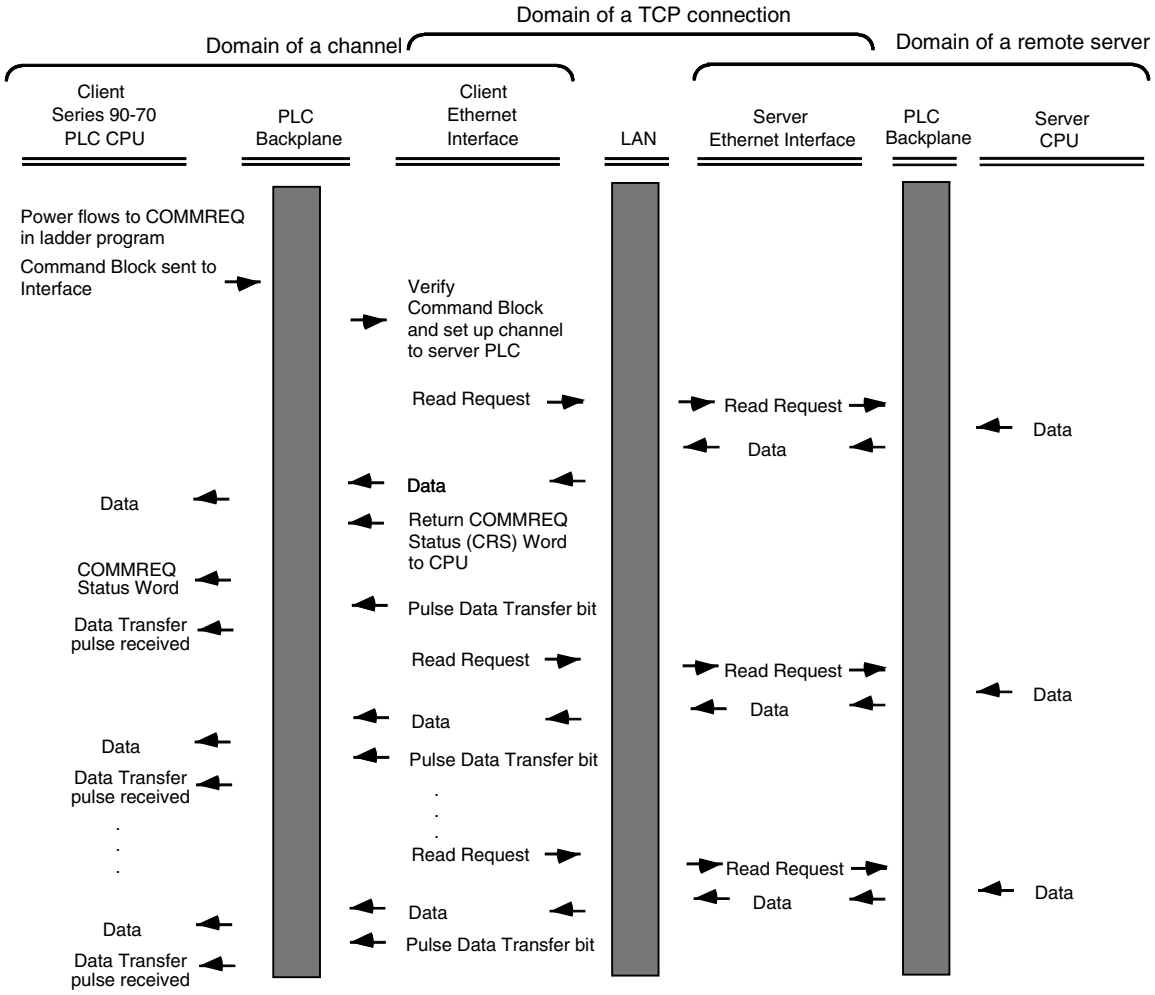

1. A Communications Request begins when there is power flow to a COMMREQ function in the client PLC. At this time, the Command Block data is sent from the PLC CPU to the Ethernet Interface.

2. For the Establish Read Channel command, the COMMREQ Status word (CRS word) is returned immediately if the Command Block is invalid. If the syntax is correct, then the CRS word is returned after the first significant event: upon failure to establish a channel correctly and in a timely manner or upon the first successful transfer of data.

   Once the channel is successfully set up to the server PLC, the Ethernet Interface performs the periodic reads as specified in the Command Block.

COMMREQ Function Block and Command Block

This section describes the programming structures common to all Communications Requests: the COMMREQ Function Block and the Command Block.

The COMMREQ Function Block

The Communications Request is triggered when the logic program passes power to the COMMREQ Function Block.

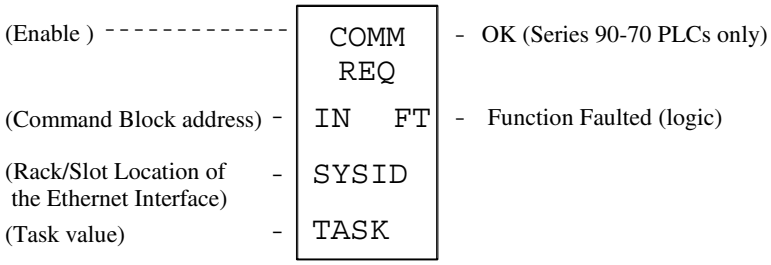

Each of the inputs and outputs are discussed in detail below. Remember that the Command Block address points to a location in memory that has been set up as the Command Block.

Enable: Control logic for activating the COMMREQ Function Block.

IN: The location of the Command Block. It can be any valid address within a word-oriented area of memory (%R, %AI, or %AQ for the Series 90-30 Ethernet Interface and the Series 90-30 CPU364) (%R, %AI, %AQ, %P, or %L for the Series 90-70 Ethernet Interface (Type 2)).

SYSID: A hexadecimal word value that gives the rack (high byte) and slot (low byte) location of the Ethernet Interface. For the Series 90-30 CPU364, this must always be set to 0001 to specify rack 0, slot 1. Note that if using GE Fanuc's VersaPro PLC software, the leading zeros in this hexadecimal word value are not displayed on-screen; for example, 0004 will appear as 4.

Examples:

Rack	Slot	Hex Word Value
0	4	0004H
3	4	0304H
2	9	0209H
4	2	0402H

Note

The Series 90-70 Ethernet Interface (Type 2) is supported only in the main PLC rack (rack number 0).

TASK: For the Series 90-30 CPU364, this must always be set to 21 decimal (0015H). For the Series 90-30 Ethernet Interface and the Series 90-70 Ethernet Interface (Type2), this must always be set to zero.

Caution

Entering an incorrect TASK value may cause the Ethernet Interface to fail.

OK Output: (Series 90-70 PLC only) The OK output is set if the PLC CPU has successfully delivered the COMMREQ to the Ethernet Interface.

FT Output: The FT output is set if the PLC CPU (rather than the Ethernet Interface) detects that the COMMREQ fails. In this case, the other status indicators are not updated for this COMMREQ.

The COMMREQ Command Block

When the COMMREQ function is initiated, the Command Block is sent from the PLC CPU to the Ethernet Interface. The Command Block contains the details of a Channel command to be performed by the Interface.

The address in CPU memory of the Command Block is specified by the IN input of the COMMREQ Function Block. This address can be any valid address within a word-oriented area of memory (%R, %AI, or %AQ for the Series 90-30 Ethernet Interface and the Series 90-30 CPU364) (%R, %AI, %AQ, %P, or %L for the Series 90-70 Ethernet Interface (Type 2)). The Command Block is set up using an appropriate programming instruction (the BLOCK MOVE or DATA_INIT (Series 90-70 PLC only) Function Blocks are recommended).

The Command Block has the following structure:

Word 1	Data Block Length (words)
Word 2	WAIT/NOWAIT Flag
Word 3	CRS Word Memory Type
Word 4	CRS Word Address Offset
Word 5	*Reserved*
Word 6	*Reserved*
Words 7 and up	Data Block (Channel Command Details)

When entering information for the Command Block, refer to these definitions:

(Word 1) Data Block Length: This is the length in words of the Data Block portion of the Command Block. The Data Block portion starts at Word 7 of the Command Block. The length is measured from the beginning of the Data Block at Word 7, not from the beginning of the Command Block. The correct value for each command, and the associated length of each command, is specified in the next section.

(Word 2) WAIT/NOWAIT Flag: This flag must be set to zero for TCP/IP Ethernet Communications.

COMMREQ Status Word: The Ethernet Interface updates the CRS word to show success or failure of the command. Command words 3 and 4 specify the PLC memory location of the CRS word.

(Word 3) COMMREQ Status Word Memory Type: This word specifies the memory type for the CRS word. The memory types are listed in the table below:

Type	Value (Decimal)	Value (Hex.)	Description
%R	8	08H	Register memory (word mode)
%AI	10	0AH	Analog input memory (word mode)
%AQ	12	0CH	Analog output memory (word mode)
%I	16 70	10H 46H	Discrete input memory (byte mode) Discrete input memory (bit mode)
%Q	18 72	12H 48H	Discrete output memory (byte mode) Discrete output memory (bit mode)
%T	20 74	14H 4AH	Discrete temporary memory (byte mode) Discrete temporary memory (bit mode)
%M	22 76	16H 4CH	Discrete momentary internal memory (byte mode) Discrete momentary internal memory (bit mode)
%G	56 86	38H 56H	Discrete global data table (byte mode) Discrete global data table (bit mode)

(Word 4) COMMREQ Status Word Address Offset: This word contains the offset within the memory type selected. ***The status word address offset is a zero-based number.*** For example, if you want %R1 as the location of the CRS word, you must specify a zero for the offset. The offset for %R100 would be 99 decimal. Note, however, that this is the only zero-based field in the Channel commands.

(Word 5): Reserved. Set to zero.

(Word 6): Reserved. Set to zero.

(Words 7 and up) Data Block: The Data Block defines the Channel command to be performed.

Channel Commands

There are five Channel commands:

- Establish Read Channel
- Establish Write Channel
- Send Information Report
- Abort Channel
- Retrieve Detailed Channel Status

Establishing a Channel

The Ethernet Interface transfers data to or from another PLC using a *channel*. There are two channel commands for transferring data between PLCs:

- Establish Read Channel
- Establish Write Channel

The Ethernet Interface also transfers data to a *host*, another computer on the network, which is running Host Communications Toolkit (HCT) software. There is one channel command for transferring data to a host computer:

- Send Information Report

These Channel commands are based on the concept of periodic data transfers. The client (local) PLC uses a single COMMREQ function to establish a channel (connection) to a server (remote) PLC and to request that specific data be periodically transferred between the PLCs.

Note: For this discussion of the Command Blocks, assume that the operator/programmer is *local* to the *client* PLC and the *server* is *remote* from this operator/programmer.

The Ethernet Interface automatically manages the establishment of communications and the periodic data transfer. Parameters in the Command Block specify the frequency and direction of the transfer, and the memory locations in the client and server to be used in the transfer.

Aborting and Re-tasking a Channel

There are four ways a channel can be aborted:

1. When the PLC CPU is stopped, all channels in use are aborted automatically.
2. A channel (or all channels) can be aborted by issuing an Abort Channel command.
3. A channel in use can be re-tasked by issuing an establish command for its channel number. This aborts the previous channel operation and then performs the new channel operation.
4. A channel is also automatically aborted if a fatal error occurs.

Retrieving Detailed Status on the Channel

There are several forms of status available to the ladder program. One form of status is obtained through the Retrieve Detailed Channel Status (RDCS) command described later in this section.

Specifying a Network Address

All establish commands must identify the remote server device with which data will be transferred. The remote device may be specified in two ways: By IP address, or by a name previously defined with the proper IP address. Examples of each Network Address type are provided for all establish commands. (For further information on the use of Network Address names, see the chapter: “Network Administration Support”.)

Establish Read Channel (2003)

The Establish Read Channel command requests that a channel be associated with a remote PLC and that data from the remote PLC be transferred (periodically) to the local PLC. The Command Block specifies the period, the number of reads from the server (remote PLC) to perform, and the timeout allowed in waiting for each transfer to complete. The first read is performed immediately, regardless of the period specified.

Example 1 Command Block–Basic Example

Establish a channel (Channel 5) to a remote PLC at IP address 10.0.0.1. Return the COMMREQ Status word to %R10. Read remote PLC registers %R50–%R57 to local PLC registers %R100–%R107. Repeat the read 10 times, once every 7 seconds, with a timeout of 500 ms for each read.

*The term **local PLC** is used here to identify the **client PLC**—the PLC that initiates the communications request.*

*The term **remote PLC** is used here to identify the **server PLC**—the PLC that responds to the communications request.*

	Dec (Hex)	
Word 1	00017 (0011)	Length of Channel command Data Block (17–25 words)
Word 2	00000 (0000)	Always 0 (no-wait mode request)
Word 3	00008 (0008)	Memory type of CRS word (%R)
Word 4	00009 (0009)	CRS word address minus 1 (%R10)*
Word 5	00000 (0000)	Reserved
Word 6	00000 (0000)	Reserved
Word 7	02003 (07D3)	Establish Read Channel command number
Word 8	00005 (0005)	Channel number (5)
Word 9	00010 (000A)	Number of read repetitions (read 10 times)
Word 10	00003 (0003)	Time unit for read period (3=seconds)
Word 11	00007 (0007)	Number of time units for read period (every 7 seconds)
Word 12	00050 (0032)	Timeout for each read (500 ms)
Word 13	00008 (0008)	Local PLC - Memory type at which to store data (%R)
Word 14	00100 (0064)	Local PLC - Starting address at which to store data (%R100)
Word 15	00008 (0008)	Remote PLC - Memory type from which to read data (%R)
Word 16	00050 (0032)	Remote PLC - Starting address from which to read data (%R50)
Word 17	00008 (0008)	Remote PLC - Number of memory units (8 registers)
Word 18	00001 (0001)	Remote PLC - Network Address type (IP Address)
Word 19	00004 (0004)	Remote PLC - Network Address length in words (4)
Word 20	00010 (000A)	Remote PLC - Register 1 of IP address (10)
Word 21	00000 (0000)	Remote PLC - Register 2 of IP address (0)
Word 22	00000 (0000)	Remote PLC - Register 3 of IP address (0)
Word 23	00001 (0001)	Remote PLC - Register 4 of IP address (1)
Word 24–27		Remote PLC - Program Name (needed for access to remote %P or %L) (zero-terminated and padded)
Word 28–31		Remote PLC - Program Block (needed for access to remote %L) (zero-terminated and padded)

* Word 4 (CRS word address) is the only zero-based address in the Command Block. Only this value requires subtracting 1 from the intended address.

(Word 7) Channel Command Number: Word 7 requests that a read channel be set up. If the command is processed successfully, it will result in attempting the specified number of transfers from the server to the client.

(Word 8) Channel Number: Word 8 specifies the channel to be used for the read. This value must be in the range of 1–32 for the Series 90-70 Ethernet Interface (Type 2) and 1–16 for the Series 90-30 Ethernet Interfaces. If the channel number is out of range, a command error indication will be placed in the COMMREQ Status word. If the channel number is the same as a channel already in use, the channel will be retasked to perform this new command.

(Word 9) Number of Read Repetitions: Word 9 specifies the number of reads to be performed before automatically completing the communications request and closing the channel. If this value is set to 1, only a single read will be issued. If this value is set to 0, reads will be issued continuously on the requested period until the channel is aborted.

(Word 10) Time Unit for Read Period: Words 10–11 together define how often the read is to be performed (*read period*). Word 10 specifies the time unit such as seconds or minutes for the read period. Word 11 specifies the number of those units. The choices for the time units are shown below.

Value	Meaning
1	hundredths of seconds (10 ms)
2	tenths of seconds (100 ms)
3	seconds
4	minutes
5	hours

Note: If Time Unit Value is 5 (hours), then the maximum usable value of Number of Time Units is 5965.

(Word 11) Number of Time Units for Read Period: Word 11 specifies the number of time units for the read period. The read period is in effect even when the Channel command is setup to issue a single read.

Example Read Period Calculation: If Word 10 contains a value of 3 specifying seconds as the time unit and Word 11 contains a value of 20, then the read period is 20 seconds.

*A Channel command set up to issue a single read can have only one **pending** read transfer.*

A read will normally be issued at the start of each read period. If the *pending* read transfer has not completed during the read period, the Channel Error bit and Detailed Channel Status words will be set to indicate a non-fatal period error. The pending transfer can still complete after the period error occurs. For Channel commands set up to issue multiple reads, the next read transfer will be issued only after the pending read transfer completes.

If the Number of Time Units is zero, a subsequent transfer will be issued as soon as the previous transfer completes. In this case, no period errors can occur.

(Word 12) Timeout for Each Read: Word 12 specifies the time (in hundredths of a second) the Ethernet Interface will wait for a read transfer to complete before setting the Channel Error bit and Detailed Channel Status words to indicate a non-fatal timeout error. The transfer can still complete even after a timeout occurs. As a result, an application can choose what to do if one occurs. If the timeout value is specified as zero, no timeout errors will be reported.

For most applications a timeout need not be specified because the read period, in effect, acts as a timeout. (Word 12 should be zero for no timeout). However, there are two special circumstances in which specifying a timeout is recommended:

- When the number of time units (Word 11) is zero, so that a subsequent transfer will be issued as soon as the previous transfer completes and no period errors are reported. In this case a timeout value can be specified so that timeout errors will be reported by the Channel Error bit.
- When the read period is very long (minutes or hours). In this case a shorter timeout value can be specified so the application doesn't have to wait for the read period to expire before taking action.

(Word 13) Local PLC - Memory Type: Words 13–14 specify the location in the local PLC where the Ethernet Interface will store data received from the remote PLC. Valid values for Word 13 are listed below. The amount of data to be transferred is specified by the number of memory units of the data read from the remote PLC (Word 17).

Type	Value (Decimal)	Description
%L*	0	Program Block Local register memory (word mode)
%P*	4	Program register memory (word mode)
%R	8	Register memory (word mode)
%AI	10	Analog input memory (word mode)
%AQ	12	Analog output memory (word mode)
%I	16 70	Discrete input memory (byte mode) Discrete input memory (bit mode)
%Q	18 72	Discrete output memory (byte mode) Discrete output memory (bit mode)
%T	20 74	Discrete temporary memory (byte mode) Discrete temporary memory (bit mode)
%M	22 76	Discrete momentary internal memory (byte mode) Discrete momentary internal memory (bit mode)
%SA	24 78	Discrete system memory group A (byte mode) Discrete system memory group A (bit mode)
%SB	26 80	Discrete system memory group B (byte mode) Discrete system memory group B (bit mode)
%SC	28 82	Discrete system memory group C (byte mode) Discrete system memory group C (bit mode)
%S	30 84	Discrete system memory (byte mode) Discrete system memory (bit mode)
%G	56 86	Discrete global data table (byte mode) Discrete global data table (bit mode)

Read-only memory, cannot be written to.

* Can only be accessed in the Remote PLC (%L and %P are available in Series 90-70 PLCs only).

(Word 14) Local PLC - Memory Starting Address: Word 14 determines the starting address in the local PLC in which the data from the remote PLC is to be stored. The value entered is the offset (1-based) from the beginning of PLC memory for the memory type and mode specified in Word 13. This offset will be either in bits, bytes, or words depending on the mode specified (for example, if Word 13=16 and Word 14=2, then the starting address will be %I9). Valid ranges of values depend on the PLC's memory ranges. The user is responsible for assuring that this area is large enough to contain the requested data without overwriting other application data.

(Word 15) Remote PLC - Memory Type: Words 15–16 specify the memory type and starting address in the remote PLC from which the data is to be read. Valid values for Word 15 are listed above. If %P memory is used, you must specify a Program name in Words 24–27. If %L memory is used, you must specify a Program name in Words 24 –27 and a Program Block name in Words 28–31.

(Word 16) Remote PLC - Memory Starting Address: Word 16 determines the starting address in the remote PLC from which the data is to be read. The value entered is the offset (1-based) from the beginning of PLC memory for the memory type and mode specified in Word 15. This offset will be either in bits, bytes, or words depending on the mode specified (for example, if Word 15=16 and Word 16=9, then the starting address will be %I65). Valid ranges of values depend on the remote PLC's memory ranges.

(Word 17) Remote PLC - Number of Memory Units: Word 17 specifies the amount of data to be transferred. The value entered is the number of memory units to be transferred, where the size of a memory unit is either a bit, byte, or word as specified in Word 15. For example, if Word 15=16 and Word 17=4, then 4 bytes (32 bits) of %I memory will be transferred.

- For the Series 90-30 PLC, a maximum of 8192 bits, 1024 bytes, or 512 words of data can be specified.
- For the Series 90-70 PLC, a maximum of 16384 bits, 2048 bytes, or 1024 words of data can be specified.

(Word 18) Remote PLC - Network Address Type: Word 18 specifies the format of the remote PLC address. Currently, Word 18 must contain the value 1 or 3. A value of 1 indicates a dotted-decimal IP address expressed using a separate register for each decimal digit. A value of 3 indicates a Network Address name. See Example 2 for information on using address type 3.

(Word 19) Remote PLC - Network Address Length: Word 19 specifies the length in words of the remote PLC IP address. When an address type of 1 is specified in Word 18, Word 19 must contain 4.

(Words 20 – 23) Remote PLC - IP Address: Words 20–23 specify the four integers, one integer per word, of the dotted-decimal IP address of the remote PLC to be accessed.

(Words 24–27) Remote PLC - Program Name: Words 24–27 specify the case-sensitive, zero-terminated and padded program name (also called task name, which can be found through the PROG Station Manager command on the server Ethernet Interface) to be used with access to remote %P or %L memory. These words are required only for access to such memory and will be ignored if the Memory Type field is not %P or %L. See Note below.

(Words 28–31) Remote PLC - Program Block Name: Words 28–31 specify the case-sensitive, zero-terminated and padded program block name (which can be found in the program block declaration in the server ladder program) to be used with access to remote %L memory. These words are required only for access to such memory and will be ignored if the Memory Type field is not %P or %L.

Note

The Program Name (Words 24–27) and Program Block Name (Words 28–31) must have each pair of ASCII characters reversed within the PLC memory. For example, the name “MARY” (“M” = 4DH, “A” = 41H, “R” = 52H, “Y” = 59H) would have 414DH in the first word and 5952H in the second word.

Example 2 Command Block–Example using a Network Address Name

This example is the same as Example 1 except that the Network Address name of the Remote PLC ("PLC_1aa") is used instead of its IP address. For more information on Network Address names, see the chapter: "Network Administration Support".

Establish a channel (Channel 5) to a remote PLC with a Network Address name of "PLC_1aa". Return the COMMREQ Status word to %R10. Read remote PLC registers %R50–%R57 to local PLC registers %R100–%R107. Repeat the read 10 times, once every 7 seconds, with a timeout of 500 ms for each read.

*The term **local PLC** is used here to identify the **client PLC**—the PLC that initiates the communications request.*

*The term **remote PLC** is used here to identify the **server PLC**—the PLC that responds to the communications request.*

	Dec	(Hex)	
Word 1	00045	(002D)	Length of Channel command Data Block (45–53 words)
Word 2	00000	(0000)	Always 0 (no-wait mode request)
Word 3	00008	(0008)	Memory type of CRS word (%R)
Word 4	00009	(0009)	CRS word address minus 1 (%R10)*
Word 5	00000	(0000)	Reserved
Word 6	00000	(0000)	Reserved
Word 7	02003	(07D3)	Establish Read Channel command number
Word 8	00005	(0005)	Channel number (5)
Word 9	00010	(000A)	Number of read repetitions (read 10 times)
Word 10	00003	(0003)	Time unit for read period (3=seconds)
Word 11	00007	(0007)	Number of time units for read period (every 7 seconds)
Word 12	00050	(0032)	Timeout for each read (500 ms)
Word 13	00008	(0008)	Local PLC - Memory type at which to store data (%R)
Word 14	00100	(0064)	Local PLC - Starting address at which to store data (%R100)
Word 15	00008	(0008)	Remote PLC - Memory type from which to read data (%R)
Word 16	00050	(0032)	Remote PLC - Starting address from which to read data (%R50)
Word 17	00008	(0008)	Remote PLC - Number of memory units (8 registers)
Word 18	00003	(0003)	Remote PLC - Network Address type (3=Symbolic Name)
Word 19	00032	(0020)	Remote PLC - Network Address length in words (32)
Word 20	19536	(4C50)	Remote PLC - Network Address name, char 1–2 ("PL")
Word 21	24387	(5F43)	Remote PLC - Network Address name, char 3–4 ("C_")
Word 22	24881	(6131)	Remote PLC - Network Address name, char 5–6 ("1a")
Word 23	00097	(0061)	Remote PLC - Network Address name, char 7–8 ("a ")
Word 24	00000	(0000)	Remote PLC - Network Address name, char 9–10
Word 25	00000	(0000)	Remote PLC - Network Address name, char 11–12
Word 26	00000	(0000)	Remote PLC - Network Address name, char 13–14
Word 27	00000	(0000)	Remote PLC - Network Address name, char 15–16
Word 28	00000	(0000)	Remote PLC - Network Address name, char 17–18
Word 29	00000	(0000)	Remote PLC - Network Address name, char 19–20
Word 30	00000	(0000)	Remote PLC - Network Address name, char 21–22
Word 31	00000	(0000)	Remote PLC - Network Address name, char 23–23
Word 32	00000	(0000)	Remote PLC - Network Address name, char 24–25
Word 33	00000	(0000)	Remote PLC - Network Address name, char 26–27
Word 34	00000	(0000)	Remote PLC - Network Address name, char 28–29
Word 35	00000	(0000)	Remote PLC - Network Address name, char 30–31
Word 36–51			Reserved: set to zero
Word 52–55			Remote PLC - Program Name (needed for access to remote %P or %L) (zero-terminated and padded)
Word 56–59			Remote PLC - Program Block (needed for access to remote %L) (zero-terminated and padded)

* Word 4 (CRS word address) is the only zero-based address in the Command Block. Only this value requires subtracting 1 from the intended address.

(Words 7 –17): See the descriptions in Example 1.

(Word 18) Remote PLC - Network Address Type: Word 18 specifies the format of the remote PLC address. Currently, Word 18 must contain the value 1 or 3. A value of 1 indicates a dotted-decimal IP address expressed using a separate register for each decimal digit. A value of 3 indicates a Network Address name. See Example 1 for information on using address type 1.

(Word 19) Remote PLC - Network Address Length: Word 19 specifies the length in words of the remote PLC Network Address name. With an address type of 3 specified in Word 18, Word 19 must contain 32 decimal.

(Words 20-35) Remote PLC - Network Address Name: Words 20–35 specify the Network Address name of the remote PLC as an ASCII character string. The Network Address name may contain up to 31 characters, is case-sensitive, and must be terminated with a null character (zero). An error will result if the Network Address name is empty or if the name could not be resolved into the address of an actual device.

The Network Address name must have each pair of ASCII characters reversed within the PLC memory. For example, the name “PLC_1aa” (“P” = 50H, “L” = 4CH, “C” = 43H, “_” = 5FH, “1” = 31H, “a” = 61H, “a” = 61H) would have 4C50H in Word 20, 5F43H in Word 21, 6131H in Word 22, and 0061H in Word 23. Words 24–35 all contain 0000H.

Note

The Network Address name of the remote PLC must be defined in the Name Table in this Ethernet Interface, or be defined as the Network Address name of the remote PLC, or else be defined at a reachable DNS Name Server. See the chapter, “Network Administration Support”, for more information.

(Words 36–51): Reserved, set to 0.

(Words 52–55) Remote PLC - Program Name: Words 52–55 specify the case-sensitive, zero-terminated and padded program name (also called task name, which can be found through the PROG Station Manager command on the server Ethernet Interface) to be used with access to remote %P or %L memory. These words are required only for access to such memory and will be ignored if the Memory Type field is not %P or %L. See Note below.

(Words 56–59) Remote PLC - Program Block Name: Words 56–59 specify the case- sensitive, zero-terminated and padded program block name (which can be found in the program block declaration in the server ladder program) to be used with access to remote %L memory. These words are required only for access to such memory and will be ignored if the Memory Type field is not %P or %L.

Note

The Program Name (Words 52–55) and Program Block Name (Words 56–59) must have each pair of ASCII characters reversed within the PLC memory. For example, the name “MARY” (“M” = 4DH, “A” = 41H, “R” = 52H, “Y” = 59H) would have 414DH in the first word and 5952H in the second word.

Establish Write Channel (2004)

The Establish Write Channel command requests that a channel be connected to a remote PLC and that data from the local PLC be transferred (periodically) to the remote PLC. The Command Block specifies the period, the number of writes to the server (remote PLC) to perform, and the timeout allowed in waiting for each transfer to complete. The first write is performed immediately, regardless of the period specified.

Example 1 Command Block–Basic Example

Establish a write channel (Channel 6) to a remote PLC at IP address 10.0.0.1. Return the COMMREQ Status word to %R10. Write local PLC registers %R50–%R57 to remote PLC registers %R100–%R107. Repeat the write indefinitely, once every 7 seconds, with a timeout of 500 ms for each write.

*The term **local PLC** is used here to identify the **client PLC**—the PLC that initiates the communications request.*

*The term **remote PLC** is used here to identify the **server PLC**—the PLC that responds to the communications request.*

	Dec	(Hex)	
Word 1	00017	(0011)	Length of Channel command Data Block (17–25 words)
Word 2	00000	(0000)	Always 0 (no-wait mode request)
Word 3	00008	(0008)	Memory type of CRS word (%R)
Word 4	00009	(0009)	CRS word address minus 1 (%R10) *
Word 5	00000	(0000)	Reserved
Word 6	00000	(0000)	Reserved
Word 7	02004	(07D4)	Establish Write Channel command number
Word 8	00006	(0006)	Channel number (6)
Word 9	00000	(0000)	Number of write repetitions (write indefinitely)
Word 10	00003	(0003)	Time unit for write period (3=seconds)
Word 11	00007	(0007)	Number of time units for write period (every 7 seconds)
Word 12	00050	(0032)	Timeout for each write (500 ms)
Word 13	00008	(0008)	Local PLC - Memory type from which to write data (%R)
Word 14	00050	(0032)	Local PLC - Starting address from which to write data (%R50)
Word 15	00008	(0008)	Remote PLC - Memory type at which to store data (%R)
Word 16	00100	(0064)	Remote PLC - Starting address at which to store data (%R100)
Word 17	00008	(0008)	Remote PLC - Number of memory units (8 registers)
Word 18	00001	(0001)	Remote PLC - Network Address type (IP address)
Word 19	00004	(0004)	Remote PLC - Network Address length in words (4)
Word 20	00010	(000A)	Remote PLC - Register 1 of IP address (10)
Word 21	00000	(0000)	Remote PLC - Register 2 of IP address (0)
Word 22	00000	(0000)	Remote PLC - Register 3 of IP address (0)
Word 23	00001	(0001)	Remote PLC - Register 4 of IP address (1)
Word 24–27			Remote PLC - Program Name (needed for access to remote %P or %L) (zero-terminated and padded)
Word 28–31			Remote PLC - Program Block (needed for access to remote %L) (zero-terminated and padded)

* Word 4 (CRS word address) is the only zero-based address in the Command Block. Only this value requires subtracting 1 from the intended address.

(Word 7) Channel Command Number: Word 7 requests that a write channel be set up. If the command is processed successfully, it will result in attempting the specified number of transfers from the client to the server.

(Word 8) Channel Number: Word 8 specifies the channel to be used for the write. This value must be in the range of 1–32 for Series 90-70 PLCs and 1–16 for Series 90-30 PLCs. If the channel number is out of range, a command error indication will be placed in the COMMREQ

Status word. If the channel number is the same as a channel already in use, the channel will be re-tasked to perform this new command.

(Word 9) Number of Write Repetitions: Word 9 specifies the number of writes to be performed before automatically completing the communications request and closing the channel. If this value is set to 1, only a single write will be issued. If this value is set to 0, writes will be issued on the requested period until the channel is aborted.

(Word 10) Time Units for Write Period: Words 10–11 together define how often the write is to be performed (*write period*). Word 10 specifies the time unit such as seconds or minutes for the write period. Word 11 specifies the number of those units. The choices for the time units are :

Value	Meaning
1	hundredths of seconds (10 ms)
2	tenths of seconds (100 ms)
3	seconds
4	minutes
5	hours

(Word 11) Number of Time Units for Write Period: Word 11 specifies the number of time units for the write period. The write period is in effect even when the Channel command is setup to issue a single write.

Example Write Period Calculation: If Word 10 contains a value of 3 specifying seconds as the time unit and Word 11 contains a value of 20, then the write period is 20 seconds.

A Channel command set up to issue a single write can have only one ***pending*** *write transfer.*

A write will normally be issued at the start of each write period. If the *pending* write transfer has not completed during the write period, the Channel Error bit and Detailed Channel Status words will be set to indicate a non-fatal period error. The pending transfer can still complete after the period error occurs. For Channel commands set up to issue multiple writes, the next write transfer will be issued only after the pending write transfer completes.

If the Number of Time Units is zero, a subsequent transfer will be issued as soon as the previous transfer completes. In this case, no period errors are reported by the Channel Error bit.

(Word 12) Timeout for Each Write: Word 12 specifies the time (in hundredths of a second) the Ethernet Interface will wait for a write transfer to complete before setting the Channel Error bit and Detailed Channel Status bits to indicate a non-fatal timeout error. The transfer can still complete even after a timeout occurs. As a result, an application can choose what to do if one occurs. If the timeout value is specified as zero, no timeout errors will be reported.

For most applications a timeout need not be specified because the write period, in effect, acts as a timeout. (Word 12 should be zero for no timeout.) However, there are two special circumstances in which specifying a timeout is recommended:

- When the number of time units (Word 11) is zero, so that a subsequent transfer will be issued as soon as the previous transfer completes and no period errors are reported. In this case a timeout value can be specified so that timeout errors will be reported by the Channel Error bit.
- When the write period is very long (minutes or hours). In this case a shorter timeout value can be specified so the application doesn't have to wait for the write period to expire before taking action.

(Word 13) Local PLC - Memory Type: Words 13–14 specify the location in the local PLC from where the Ethernet Interface will get the data to be written to the remote PLC. Valid values for Word 13 are listed in the description of Establish Read Channel. The amount of data to be

transferred is specified by the number of memory units of the data written to the remote PLC (Word 17).

(Word 14) Local PLC - Memory Starting Address: Word 14 determines the starting address in the local PLC from which the data is to be written. The value entered is the offset (1-based) from the beginning of PLC memory for the memory type and mode specified in Word 13. This offset will be either in bits, bytes, or words depending on the mode specified (for example, if Word 13=16 and Word 14=2, then the starting address will be %I9). Valid ranges of values depend on the PLC's memory ranges.

(Word 15) Remote PLC - Memory Type: Words 15–16 specify the memory type and starting address in the remote PLC where the data is to be written. Valid values for Word 15 are listed under Establish Read Channel. If %P memory is used, you must specify a Program name in Words 24–27. If %L memory is used, you must specify a Program name in Words 24–27 and a Program Block name in Words 28–31.

(Word 16) Remote PLC - Memory Starting Address: Word 16 determines the starting address in the remote PLC where the data is to be written. The value entered is the offset (1-based) from the beginning of PLC memory for the memory type and mode specified in Word 15. This offset will be either in bits, bytes, or words depending on the mode specified (for example, if Word 15=16 and Word 16=9, then the starting address will be %I65). Valid ranges of values depend on the remote PLC's memory ranges.

(Word 17) Remote PLC - Number of Memory Units: Word 17 specifies the amount of data to be transferred. The value entered is the number of memory units to be transferred, where the size of a memory unit is either a bit, byte, or word as specified in Word 15. For example, if Word 15=16 and Word 17=4, then 4 bytes (32 bits) of %I memory will be transferred. The user is responsible for assuring that this area is large enough to contain the requested data without overwriting other application data.

- For the Series 90-30 PLC, a maximum of 8192 bits, 1024 bytes, or 512 words of data can be specified.
- For the Series 90-70 PLC, a maximum of 16384 bits, 2048 bytes, or 1024 words of data can be specified.

(Word 18) Remote PLC - Network Address Type: Word 18 specifies the format of the remote PLC address. Currently, Word 18 must contain the value 1 or 3. A value of 1 indicates a dotted-decimal IP address expressed using a separate register for each decimal digit. A value of 3 indicates a Network Address name. See Example 2 for information on using address type 3.

(Word 19) Remote PLC - Network Address Length: Word 19 specifies the length in words of the remote PLC IP address. When an address type of 1 is specified in Word 18, Word 19 must contain 4.

(Words 20–23) Remote PLC - IP Address: Words 20–23 specify the four integers, one integer per word, of the dotted-decimal IP address of the remote PLC to be accessed.

(Words 24–27) Remote PLC - Program Name: Words 24–27 specify the case-sensitive, zero-terminated and padded program name (also called task name, which can be found through the PROG Station Manager command on the server Ethernet Interface) to be used with access to remote %P or %L memory. These words are required only for access to such memory and will be ignored if the Memory Type field is not %P or %L.

(Words 28–31) Remote PLC - Program Block Name: Words 28–31 specify the case- sensitive, zero-terminated and padded program block name (which can be found in the program block declaration in the server ladder program) to be used with access to remote %L memory. These words are required only for access to such memory and will be ignored if the Memory Type field is not %P or %L.

Note

The Program Name (Words 24–27) and Program Block Name (Words 28–31) must have each pair of ASCII characters reversed within the PLC memory. For example, the name “MARY” (“M” = 4DH, “A” = 41H, “R” = 52H, “Y” = 59H) would have 414DH in the first word and 5952H in the second word.

Example 2 Command Block–Example using a Network Address name

This example is the same as Example 1 except that the Network Address name of the Remote PLC ("PLC_1aa") is used instead of its IP address. For more information on Network Address names, see the chapter: "Network Administration Support".

Establish a write channel (Channel 6) to a remote PLC with a Network Address name of "PLC_1aa". Return the COMMREQ Status word to %R10. Write local PLC registers %R50–%R57 to remote PLC registers %R100–%R107. Repeat the write indefinitely once every 7 seconds with a timeout of 500 ms for each write.

*The term **local PLC** is used here to identify the **client PLC**—the PLC that initiates the communications request.*

*The term **remote PLC** is used here to identify the **server PLC**—the PLC that responds to the communications request.*

	Dec	(Hex)	
Word 1	00045	(002D)	Length of Channel command Data Block (45–53 words)
Word 2	00000	(0000)	Always 0 (no-wait mode request)
Word 3	00008	(0008)	Memory type of CRS word (%R)
Word 4	00009	(0009)	CRS word address minus 1 (%R10) *
Word 5	00000	(0000)	Reserved
Word 6	00000	(0000)	Reserved
Word 7	02004	(07D4)	Establish Write Channel command number
Word 8	00006	(0006)	Channel number (6)
Word 9	00000	(0000)	Number of write repetitions (write indefinitely)
Word 10	00003	(0003)	Time unit for write period (3=seconds)
Word 11	00007	(0007)	Number of time units for write period (every 7 seconds)
Word 12	00050	(0032)	Timeout for each write (500 ms)
Word 13	00008	(0008)	Local PLC - Memory type from which to write data (%R)
Word 14	00050	(0032)	Local PLC - Starting address from which to write data (%R50)
Word 15	00008	(0008)	Remote PLC - Memory type at which to store data (%R)
Word 16	00100	(0064)	Remote PLC - Starting address at which to store data (%R100)
Word 17	00008	(0008)	Remote PLC - Number of memory units (8 registers)
Word 18	00003	(0003)	Remote PLC - Network Address type (3=Symbolic Name)
Word 19	00032	(0020)	Remote PLC - Network Address length in words (32)
Word 20	19536	(4C50)	Remote PLC - Network Address name, char 1–2 ("PL")
Word 21	24387	(5F43)	Remote PLC - Network Address name, char 3–4 ("C_")
Word 22	24881	(6131)	Remote PLC - Network Address name, char 5–6 ("1a")
Word 23	00097	(0061)	Remote PLC - Network Address name, char 7–8 ("a ")
Word 24	00000	(0000)	Remote PLC - Network Address name, char 9–10
Word 25	00000	(0000)	Remote PLC - Network Address name, char 11–12
Word 26	00000	(0000)	Remote PLC - Network Address name, char 13–14
Word 27	00000	(0000)	Remote PLC - Network Address name, char 15–16
Word 28	00000	(0000)	Remote PLC - Network Address name, char 17–18
Word 29	00000	(0000)	Remote PLC - Network Address name, char 19–20
Word 30	00000	(0000)	Remote PLC - Network Address name, char 21–22
Word 31	00000	(0000)	Remote PLC - Network Address name, char 23–23
Word 32	00000	(0000)	Remote PLC - Network Address name, char 24–25
Word 33	00000	(0000)	Remote PLC - Network Address name, char 26–27
Word 34	00000	(0000)	Remote PLC - Network Address name, char 28–29
Word 35	00000	(0000)	Remote PLC - Network Address name, char 30–31
Word 36–51			Reserved: set to zero
Word 52–55			Remote PLC - Program Name (needed for access to remote %P or %L) (zero-terminated and padded)
Word 56–59			Remote PLC - Program Block (needed for access to remote %L) (zero-terminated and padded)

* Word 4 (CRS word address) is the only zero-based address in the Command Block. Only this value requires subtracting 1 from the intended address.

(Words 7 –17): See the descriptions in Example 1.

(Word 18) Remote PLC - Network Address Type: Word 18 specifies the format of the remote PLC address. Currently, Word 18 must contain the value 1 or 3. A value of 1 indicates a dotted-decimal IP address expressed using a separate register for each decimal digit. A value of 3 indicates a Network Address name. See Example 1 for information on using address type 1.

(Word 19) Remote PLC - Network Address Length: Word 19 specifies the length in words of the remote PLC Network Address name. With an address type of 3 specified in Word 18, Word 19 must contain 32 decimal.

(Words 20–35) Remote PLC - Network Address Name: Words 20–35 specify the Network Address name of the remote PLC as an ASCII character string. The Network Address name may contain up to 31 characters, is case-sensitive, and must be terminated with a null character (zero). An error will result if the Network Address name is empty or if the name could not be resolved into the address of an actual device.

The Network Address name must have each pair of ASCII characters reversed within the PLC memory. For example, the name “PLC_1aa” (“P” = 50H, “L” = 4CH, “C” = 43H, “_” = 5FH, “1” = 31H, “a” = 61H, “a” = 61H) would have 4C50H in Word 20, 5F43H in Word 21, 6131H in Word 22, and 0061H in Word 23. Words 24–35 all contain 0000H.

Note

The Network Address name of the remote PLC must be defined in the Name Table in this Ethernet Interface, or be defined as the Network Address name of the remote PLC, or else be defined at a reachable DNS Name Server. See Chapter 7, “Network Administration Support”, for more information.

(Words 36–51): Reserved, set to 0.

(Words 52–55) Remote PLC - Program Name: Words 52–55 specify the case-sensitive, zero-terminated and padded program name (also called task name, which can be found through the PROG Station Manager command on the server Ethernet Interface) to be used with access to remote %P or %L memory. These words are required only for access to such memory and will be ignored if the Memory Type field is not %P or %L. See Note below.

(Words 56–59) Remote PLC - Program Block Name: Words 56–59 specify the case- sensitive, zero-terminated and padded program block name (which can be found in the program block declaration in the server ladder program) to be used with access to remote %L memory. These words are required only for access to such memory and will be ignored if the Memory Type field is not %P or %L.

Note

The Program Name (Words 52–55) and Program Block Name (Words 56–59) must have each pair of ASCII characters reversed within the PLC memory. For example, the name “MARY” (“M” = 4DH, “A” = 41H, “R” = 52H, “Y” = 59H) would have 414DH in the first word and 5952H in the second word.

Send Information Report (2010)

The Send Information Report COMMREQ requests that a particular block of memory within the PLC CPU reference tables be transferred periodically from an Ethernet Interface (SRTP Client) to a Host Application SRTP Server. The Command Block specifies the repetition period, the number of transfers to the server to perform, and the timeout allowed in waiting for each transfer to complete. The first send is performed immediately, regardless of the period specified.

Example1 Command Block–Basic Example

Establish a channel (Channel 7) to a remote Host application server at IP address 10.0.0.1. Return the COMMREQ Status word to %R10. Send local PLC registers %R50–%R57 to remote host. Repeat the send 10 times, once every 7 seconds, with a timeout of 500 ms for each transfer.

*The term **local PLC** is used here to identify the **client PLC**—the PLC that initiates the communications request.*

*The term **SRTP Server** is used here to identify the **Host server.***

	Dec	(Hex)	
Word 1	00017	(0011)	Length of Send Information Report Data Block (17 words)
Word 2	00000	(0000)	Always 0 (no–wait mode request)
Word 3	00008	(0008)	Memory type of CRS word (%R)
Word 4	00009	(0009)	CRS word address minus 1 (%R10)*
Word 5	00000	(0000)	Reserved
Word 6	00000	(0000)	Reserved
Word 7	02010	(07DA)	Send Information Report Channel command number
Word 8	00007	(0007)	Channel number (7)
Word 9	00010	(000A)	Number of repetitions (send 10 times)
Word 10	00003	(0003)	Time unit for send period (3=seconds)
Word 11	00007	(0007)	Minimum interval between host accesses (every 7 seconds)
Word 12	00050	(0032)	Timeout on each individual transfer response (500 ms)
Word 13	00008	(0008)	Local PLC - Memory type from which to send data (%R)
Word 14	00050	(0032)	Local PLC - Starting address from which to send data (%R50)
Word 15	00008	(0008)	Local PLC - Number of memory units (8 registers)
Word 16	00000	(0000)	Reserved
Word 17	00000	(0000)	Reserved
Word 18	00001	(0001)	Remote Network Address type (IP Address)
Word 19	00004	(0004)	Remote Network Address length in words (4)
Word 20	00010	(000A)	Remote Host - Register 1 of IP address (10)
Word 21	00000	(0000)	Remote Host - Register 2 of IP address (0)
Word 22	00000	(0000)	Remote Host - Register 3 of IP address (0)
Word 23	00001	(0001)	Remote Host - Register 4 of IP address (1)

* Word 4 (CRS word address) is the only zero-based address in the Command Block. Only this value requires subtracting 1 from the intended address.

(Word 7) Channel Command Number: Word 7 requests that a Send Information Report channel be set up. If the command is processed successfully, it will result in attempting the specified number of transfers from the client to the server.

(Word 8) Channel Number: Word 8 specifies the channel to be used for the send. This value must be in the range of 1–32 for Series 90-70 PLCs and 1–16 for Series 90-30 PLCs. If the channel number is out of range, a command error indication will be placed in the COMMREQ Status word. If the channel number is the same as a channel already in use, the channel will be re-tasked to perform this new command.

(Word 9) Number of Send Repetitions: Word 9 specifies the number of transfers to be performed before automatically completing the communications request and closing the channel.

If this value is set to 1, only a single transfer will be issued. If this value is set to 0, transfers will be issued on the requested period until the channel is aborted.

(Word 10) Time Unit for Send Period: Words 10-11 together define how often the transfer is to be performed (*transfer period*). Word 10 specifies the time unit such as seconds or minutes for the send period. Word 11 specifies the number of those units. The choices for the time units are shown below.

Value	Meaning
1	hundredths of seconds (10 ms)
2	tenths of seconds (100 ms)
3	seconds
4	minutes
5	hours

(Word 11) Number of Time Units for Send Period: Word 11 specifies the number of time units for the send period. The send period is in effect even when the Channel command is setup to issue a single send.

*A Channel command set up to issue a single send can have only one **pending** send transfer.*

Example Send Period Calculation: If Word 10 contains a value of 3 specifying seconds as the time unit and Word 11 contains a value of 20, then the send period is 20 seconds.

A send will normally be issued at the start of each send period. If the *pending* transfer has not completed during the send period, the Channel Error bit and Detailed Channel Status words will be set to indicate a non-fatal period error. The pending transfer can still complete after the period error occurs. For Channel commands set up to issue multiple sends, the next transfer will be issued only after the pending transfer completes.

If the Number of Time Units is zero, a subsequent transfer will be issued as soon as the previous transfer completes. In this case, no period errors are reported by the Channel Error bit.

(Word 12) Timeout for Each Send: Word 12 specifies the time (in hundredths of a second) the Ethernet Interface will wait for a send transfer to complete before setting the Channel Error bit and Detailed Channel Status bits to indicate a non-fatal timeout error. The transfer can still complete even after a timeout occurs. As a result, an application can choose what to do if one occurs. If the timeout value is specified as zero, no timeout errors will be reported.

For most applications a timeout need not be specified because the send period, in effect, acts as a timeout. (Word 12 should be zero for no timeout.) However, there are two special circumstances in which specifying a timeout is recommended:

- When the number of time units (Word 11) is zero, so that a subsequent transfer will be issued as soon as the previous transfer completes and no period errors are reported. In this case a timeout value can be specified so that timeout errors will be reported by the Channel Error bit.
- When the send period is very long (minutes or hours). In this case a shorter timeout value can be specified so the application doesn't have to wait for the send period to expire before taking action.

(Word 13) Local PLC - Memory Type: Words 13–14 specify the location in the local PLC from where the Ethernet Interface will get the data to be written to the remote SRTP server. Valid values for Word 13 are listed for Establish Read Channel. The amount of data to be transferred to the server is specified by the number of memory units (Word 15).

(Word 14) Local PLC - Memory Starting Address: Word 14 determines the starting address in the local PLC from which the data is to be sent. The value entered is the offset (1-based) from the beginning of PLC memory for the memory type and mode specified in Word 13. This offset will be either in bits, bytes, or words depending on the mode specified (for example, if Word 13=16 and Word 14=2, then the starting address will be %I9). Valid ranges of values depend on the PLC's memory ranges.

(Word 15) Local PLC - Number of Memory Units: Word 15 specifies the amount of data to be transferred. The value entered is the number of memory units to be transferred, where the size of a memory unit is either a bit, byte, or word as specified in Word 13. For example, if Word 13=16 and Word 15=4, then 4 bytes (32 bits) of %I memory will be transferred.

- For the Series 90-30 PLC, a maximum of 8192 bits, 1024 bytes, or 512 words of data can be specified.
- For the Series 90-70 PLC, a maximum of 16384 bits, 2048 bytes, or 1024 words of data can be specified.

(Word 16) Reserved: Word 16 is reserved and should contain the value zero.

(Word 17) Reserved: Word 17 is reserved and should contain the value zero.

(Word 18) Remote Host - Network Address Type: Word 18 specifies the format of the remote host's address. In this release, Word 18 must contain the value 1 or 3. A value of 1 indicates a dotted-decimal IP address expressed using a separate register for each decimal digit. A value of 3 indicates a Network Address name. See Example 2 for information on using address type 3.

(Word 19) Remote Host - Network Address Length: Word 19 specifies the length in words of the remote host's IP address. When an address type of 1 is specified in Word 18, Word 19 must contain 4.

(Words 20–23) Remote Host - IP Address: Words 20–23 specify the four integers, one integer per word, of the dotted-decimal IP address of the remote host to be accessed.

Example 2 Command Block–Example using a Network Address name

This example is the same as Example 1 except that the Network Address name of the remote host ("PLC_1aa") is used instead of its IP address. For more information on Network Address names, see the chapter: "Network Administration Support".

Establish a channel (Channel 7) to a remote host application server with a Network Address name of "PLC_1aa". Return the COMMREQ Status word to %R10. Send local PLC registers %R50–%R57 to remote host. Repeat the send 10 times, once every 7 seconds, with a timeout of 500 ms for each transfer.

*The term **local PLC** is used here to identify the **client PLC**—the PLC that initiates the communications request.*

*The term **SRTP Server** is used here to identify the **Host server.***

	Dec	(Hex)	
Word 1	00045	(002D)	Length of Send Information Report Data Block (45 words)
Word 2	00000	(0000)	Always 0 (no-wait mode request)
Word 3	00008	(0008)	Memory type of CRS word (%R)
Word 4	00009	(0009)	CRS word address minus 1 (%R10)*
Word 5	00000	(0000)	Reserved
Word 6	00000	(0000)	Reserved
Word 7	02010	(07DA)	Send Information Report Channel command number
Word 8	00007	(0007)	Channel number (7)
Word 9	00010	(000A)	Number of repetitions (send 10 times)
Word 10	00003	(0003)	Time units for send period (3=seconds)
Word 11	00007	(0007)	Minimum interval between host accesses (every 7 seconds)
Word 12	00050	(0032)	Timeout on each individual transfer response (500 ms)
Word 13	00008	(0008)	Local PLC - Memory type from which to send data (%R)
Word 14	00050	(0032)	Local PLC - Starting address from which to send data (%R50)
Word 15	00008	(0008)	Local PLC - Number of memory units (8 registers)
Word 16	00000	(0000)	Reserved
Word 17	00000	(0000)	Reserved
Word 18	00003	(0003)	Remote Host - Network Address type (3=Symbolic Name)
Word 19	00032	(0020)	Remote Host - Network Address length in words (32)
Word 20	19536	(4C50)	Remote Host - Network Address name, char 1–2 (PL)
Word 21	24387	(5F43)	Remote Host - Network Address name, char 3–4 (C_)
Word 22	24881	(6131)	Remote Host - Network Address name, char 5–6 (1a)
Word 23	00097	(0061)	Remote Host - Network Address name, char 7–8 (a)
Word 24	00000	(0000)	Remote Host - Network Address name, char 9–10
Word 25	00000	(0000)	Remote Host - Network Address name, char 11–12
Word 26	00000	(0000)	Remote Host - Network Address name, char 13–14
Word 27	00000	(0000)	Remote Host - Network Address name, char 15–16
Word 28	00000	(0000)	Remote Host - Network Address name, char 17–18
Word 29	00000	(0000)	Remote Host - Network Address name, char 19–20
Word 30	00000	(0000)	Remote Host - Network Address name, char 21–22
Word 31	00000	(0000)	Remote Host - Network Address name, char 23–23
Word 32	00000	(0000)	Remote Host - Network Address name, char 24–25
Word 33	00000	(0000)	Remote Host - Network Address name, char 26–27
Word 34	00000	(0000)	Remote Host - Network Address name, char 28–29
Word 35	00000	(0000)	Remote Host - Network Address name, char 30–31
Word 36–51			Reserved: set to zero

* Word 4 (CRS word address) is the only zero-based address in the Command Block. Only this value requires subtracting 1 from the intended address.

(Words 7–17): See the descriptions in Example 1.

(Word 18) Remote Host - Network Address Type: Word 18 specifies the format of the remote host's address. Currently, Word 18 must contain the value 1 or 3. A value of 1 indicates a dotted-decimal IP address expressed using a separate register for each decimal digit. A value of 3 indicates a Network Address name. See Example 1 for information on using address type 1.

(Word 19) Remote Host - Network Address Length: Word 19 specifies the length in words of the remote host's Network Address name. With an address type of 3 specified in Word 18, Word 19 must contain 32 decimal.

(Words 20–35) Remote Host - Network Address Name: Words 20–35 specify the Network Address name of the remote host as an ASCII character string. The Network Address name may contain up to 31 characters, is case sensitive, and must be terminated with a null character (zero). An error will result if the Network Address name is empty or if the name could not be resolved into the address of an actual device.

The Network Address name must have each pair of ASCII characters reversed within the PLC memory. For example, the name "PLC_1aa" ("P" = 50H, "L" = 4CH, "C" = 43H, "_" = 5FH, "1" = 31H, "a" = 61H, "a" = 61H) would have 4C50H in Word 20, 5F43H in Word 21, 6131H in Word 22, and 0061H in Word 23. Words 24–35 all contain 0000H.

Note

The Network Address name of the remote host must be defined in the Name Table in this Ethernet Interface or be defined at a reachable DNS Name Server. See the chapter: "Network Administration Support", for more information.

(Words 36–51): Reserved, set to 0.

Abort Channel (2001)

The Abort Channel command immediately disconnects an active channel from its remote PLC and renders the channel idle. The Channel Transfer bit, the Channel Error bit, and the Detailed Channel Status words for the channel are set to zero.

Example Command Block

Abort Channel 5. Return the COMMREQ Status word to %R10.

	Dec	(Hex)	
Word 1	00002	(0002)	Length of Channel command Data Block (2 words)
Word 2	00000	(0000)	Always 0 (no-wait mode request)
Word 3	00008	(0008)	Memory type of CRS word (%R)
Word 4	00009	(0009)	CRS word address minus 1 (%R10)*
Word 5	00000	(0000)	Reserved
Word 6	00000	(0000)	Reserved
Word 7	02001	(07D1)	Abort Channel command number
Word 8	00005	(0005)	Channel number 5

* Word 4 (CRS word address) is the only zero-based address in the Command Block. Only this value requires subtracting 1 from the intended address.

(Word 7) Channel Command Number: This command parameter requests that a channel be aborted. If the command is processed successfully, it will terminate the processing on the channel by the time success is indicated in the COMMREQ Status word.

(Word 8) Channel Number: The channel number specifies the channel to be disconnected (1–32 for Series 90-70 PLCs and 1–16 for Series 90-30 PLCs). As a convenient way to abort all channels, if the channel number parameter is –1 (FFFFH), all channels in use will be aborted. It is *not* an error to abort all channels when there are none in use. Neither is it an error to abort an idle channel.

Note

For the Abort Channel and Retrieve Detailed Channel Status commands, no actual data is transmitted on the network. Communication occurs between the client PLC CPU and the local Ethernet Interface only. For these commands, the actual function is performed locally within the Ethernet Interface and then the COMMREQ Status word is sent immediately to the CPU.

Retrieve Detailed Channel Status (2002)

The Retrieve Detailed Channel Status command requests that the *current* Detailed Channel Status words be returned for a channel. The Detailed Channel Status words contain an active/inactive channel indicator and the last channel error codes seen. These two words of detailed status supplement the information available in the COMMREQ Status word and the Channel Status bits. The command has no effect on the value of the Channel Status bits.

Be aware that the Detailed Channel Status words are updated every time the status of the channel changes. If, for example, the channel is operating with a fast repetition period, the status words may change faster than the ladder executes the COMMREQ to retrieve them. Therefore, some status values might be missed from the ladder's point of view.

Example Command Block

Retrieve detailed channel status for Channel 5. Store the Detailed Channel Status words to Registers %R100–%R101. Return the COMMREQ Status word to %R10.

*The term **local PLC** is used here to identify the **client PLC**—the PLC that initiates the communications request.*

	Dec	(Hex)	
Word 1	00004	(0004)	Length of Channel command Data Block (4 words)
Word 2	00000	(0000)	Always 0 (no-wait mode request)
Word 3	00008	(0008)	Memory Type of CRS word (%R)
Word 4	00009	(0009)	CRS word address minus 1 (%R10)*
Word 5	00000	(0000)	Reserved
Word 6	00000	(0000)	Reserved
Word 7	02002	(07D2)	Retrieve Detailed Channel Status Command number
Word 8	00005	(0005)	Channel number 5
Word 9	00008	(0008)	Local PLC - Memory type to store Detailed Chan. Stat. (%R)
Word 10	00100	(0064)	Local PLC - Starting address (%R100)

* Word 4 (CRS word address) is the only zero-based address in the Command Block. Only this value requires subtracting 1 from the intended address.

(Word 7) Channel Command Number: The command parameter in Word 7 requests that Detailed Channel Status words be returned. If the command is processed successfully, the Detailed Channel Status words will be written to the location specified in Words 9 and 10. Then the CRS word will indicate successful completion of the command. If the specified channel is not currently in use, the latest status will be returned.

(Word 8) Channel Number: The channel number in Word 8 specifies the channel whose status is to be read. This value must be a channel number in the range of 1–32 for Series 90-70 PLCs and 1–16 for Series 90-30 PLCs.

(Word 9) Local PLC - Memory Type: Words 9 and 10 specify the starting point in the client CPU memory where the Detailed Channel Status words are to be written. The length of the transfer is implied and is equal to 2 words.

(Word 10) Local PLC - Memory Starting Address: Word 10 determines the starting address to store the Detailed Channel Status data. The value entered is the offset (1-based) from the beginning of PLC memory for the memory type and mode specified in Word 9. This offset will be either in bits, bytes, or words depending on the mode specified (for example, if Word 9=16 and Word 10=2, then the starting address will be %I9). Valid ranges of values depend on the PLC's memory ranges. The user is responsible for assuring that this area is large enough to contain the 2 words of data without overwriting other application data.

Note

For the Abort Channel and Retrieve Detailed Channel Status commands, no actual data is transmitted on the network. Communication occurs between the client PLC CPU and the local Ethernet Interface only. For these commands, known as "local" commands, the actual function is performed locally within the Ethernet Interface and then the COMMREQ Status word is sent immediately to the CPU.

Status Data

This section describes all the status data that is available to the ladder program to determine the state of the Ethernet Interface and its channels.

Types of Status Data

There are four main types of status data available to your ladder program:

1. **OK Output of the COMMREQ Function Block. (Series 90-70 PLCs only)** This output is set if the PLC CPU was successful in transferring the COMMREQ data from the reference table memory specified by the COMMREQ function block into the memory local to the Ethernet Interface. This does not indicate that the Ethernet Interface has processed the COMMREQ, only that it has been received by the Ethernet Interface.

   Barring ladder programming errors, the OK and FT outputs should not both be set in the same scan by the same COMMREQ.

2. **FT Output of the COMMREQ Function Block.** This output is set if there is a programming error in the COMMREQ Function Block itself, if the rack and slot specified in the COMMREQ SYSID parameter is not configured to contain an Ethernet Interface, or if the data block length specified in the Command Block is out of range. This output also may indicate that no more COMMREQ functions can be initiated in the ladder program until the Ethernet Interface has time to process some of the pending COMMREQ functions.

   If the FT Output is set, the CPU does not transfer the Command Block to the Ethernet Interface. In this case, the other status indicators are not updated for this COMMREQ.

3. **Status Bits.** The status bits are updated in the CPU once each PLC scan by the Ethernet Interface. These bits are generally used to prevent initiation of a COMMREQ function when certain errors occur or to signal a problem on an established channel. The status bits include the LAN Interface Status bits and the Channel Status bits. The starting location of these bits is user-configurable.

   The LAN Interface Status bits monitor the health of the Ethernet Interface itself, such as the LAN Interface OK bit and the AUI/BNC Fuse Blown bit for Series 90-70 PLCs (AAUI Fuse Blown bit for Series 90-30 PLCs). The Channel Status bits monitor the health and progress of a channel established using the Establish Read/Write Channel commands.

4. **Communications Status Words.** There are two types of words that provide detailed information: The COMMREQ Status word (CRS word) and the Detailed Channel Status words (DCS words). The communications status words are not updated in the CPU each scan as are the status bits. They are generally used to determine the *cause* of a communications error after the COMMREQ function is initiated. The cause is reported in the form of an error code described later in this section.

The COMMREQ Status word (CRS word) is returned from the Ethernet Interface to the PLC CPU immediately if the Command Block contains a syntax error or if the command is local. For remote commands with no syntax error, it is returned either after the channel is established successfully and the first transfer has completed or if there is an error establishing the channel. The location of the CRS word is defined in the Command Block for the COMMREQ function.

The Detailed Channel Status words (DCS words) are returned from the Ethernet Interface to the CPU only by executing the Retrieve Detailed Channel Status Command. If a channel error is indicated (by the Channel Error bit) after the channel is established, the first word of the DCS words will contain an error code indicating the cause of the error. The second word of the DCS words indicates whether the channel is active or idle.

Be aware that the Detailed Channel Status words are updated every time the status of the channel changes. If, for example, the channel is operating with a fast repetition period, the status words may change faster than the ladder executes the COMMREQ to retrieve them. Therefore, some status values may be missed from the ladder's point of view.

Description of the Status Data

The errors and status reported in each type of status data are described below.

OK Output of the COMMREQ Function Block (Series 90-70 PLCs Only)

The OK output is set if the PLC CPU has successfully delivered the COMMREQ to the Ethernet Interface.

FT Output of the COMMREQ Function Block

The FT Output passes power upon the following errors:

- Invalid rack/slot specified. The module at this rack/slot is unable to receive a COMMREQ.
- Invalid Task ID.
- Invalid Data Block length (zero or greater than 128).
- Too many simultaneous active COMMREQs (overloading either the PLC CPU or the Ethernet Interface).

LAN Interface Status (LIS) Bits

The status bits normally occupy a single block of memory. The location of this block is specified during configuration of the Ethernet Interface. The first 16 bits of the block (see Table 5-3) are the LAN Interface Status (LIS) bits. The next 64 bits are the Channel Status bits (2 for each channel).

Status Bits	Brief Description
1	Port 1 full duplex
2	Port 1 100Mbps
3	Port 2 full duplex
4	Port 2 100 Mbps
5-6	Reserved
7	RS-485 port fuse blown
8	AAUI (90-30) or AUI/BNC (90-70) fuse blown
9	Any SRTP Channel Error (error on any channel)
10–12	Reserved
13	LAN OK
14	Resource problem
15	Reserved
16	LAN Interface OK
17	Data Transfer - Channel 1
18	Channel Error - Channel 1
...	...
47	Data Transfer - Channel 16
48	Channel Error - Channel 16
49	Data Transfer - Channel 17 (90-70 only)
50	Channel Error - Channel 17 (90-70 only)
...	...
79	Data Transfer - Channel 32 (90-70 only)
80	Channel Error - Channel 32 (90-70 only)

For Series 90-30 PLCs, bits 49-80 are reserved for future use.

Unless the “LAN Interface OK” bit is set (Status Bit 16), the other status bits are invalid.

(Status Bit 1) Port 1 Full Duplex: This bit is set to 1 when Port 1 (or the only port on a module that does not incorporate a embedded switch) is set to full duplex. [Not implemented on the CMM321].

(Status Bit 2) Port 1 100Mbps: This bit is set to 1 when Port 1 (or the only port on a module that does not incorporate a embedded switch) is operating at 100Mbps.

(Status Bit 3) Port 2 Full Duplex: This bit is set to 1 when Port 2 is set to full duplex.

(Status Bit 4) Port 2 100Mbps: This bit is set to 1 when Port 2 is operating at 100Mbps.

(Status Bit 7) RS-485 Port Fuse Blown (Series 90-30 Ethernet Interface and Series 90-70 Ethernet Interface (Type 2) only): This bit is set to 1 when the RS-485 Port fuse is blown. Otherwise it is set to 0. Operation is affected only if the Interface is in the Software Load state. This fuse is not field replaceable.

(Status Bit 8) AAUI (90-30) or AUI/BNC (90-70) Fuse Blown: This bit is set to 1 when a network port fuse is blown. Otherwise, it is set to zero. This failure is also reported to the PLC Fault Table. The applicable network port fuses and PLC Fault Table entries for each of the Ethernet Interfaces are listed below.

- Series 90-30 Ethernet Interface:
  AAUI port fuse (FU1) (**NOT** user replaceable)
  PLC Fault Table entry – "LAN interface hardware failure; switched off network".
- Series 90-30 CPU364:
  AAUI port fuse (FU1) (user replaceable)
  PLC Fault Table entry – "LAN controller fuse blown; off network".
- Series 90-70 Ethernet Interface (Type 2)
  AUI port fuse (FU3) (user replaceable) or BNC port fuse (FU1) (**NOT** user replaceable)
  PLC Fault Table entry – "LAN controller fuse blown; off network".

Operation on other ports is not affected. This problem can be caused by a defective transceiver, shorted network or transceiver cable, or a defective Ethernet Interface. Isolate and correct the cause of the problem, and then replace the fuse or the Ethernet Interface.

(Status Bit 9) Any SRTP Channel Error: This bit is set to 1 if there is presently an error on any of the established SRTP channels; i.e., if the individual Channel Error bit is set for any channel. (This bit does not apply to Modbus/TCP Channels.)

(Status Bit 13) LAN OK: This input will be held at the value 1 as long as the Ethernet Interface software is able to communicate on the network. If the network should become inaccessible from this Interface, due either to local or network problems, this bit will be set to 0. If LAN communication becomes possible, it is set to 1.

(Status Bit 14) Resource Problem: This input is set to 1 whenever the Ethernet Interface software experiences a resource problem (i.e., lack of data memory). The bit is reset to 0 on a subsequent PLC sweep. The Ethernet Interface may or may not be able to continue functioning, depending on the severity of the problem. Use the PLC Fault Table to understand the problem. See Chapter 8, "Troubleshooting", for further information. In addition, you can use the Station Manager STAT B and LOG commands to further understand the problem. See the Station Manager Manual, GFK-1186, for more information.

(Status Bit 16) LAN Interface OK Bit: This input is set to 1 by the Ethernet Interface each PLC scan. If the Ethernet Interface cannot access the PLC, the CPU will set this bit to 0. *When this bit is 0, all other Ethernet Interface Status bits are invalid.*

Each SRTP channel has a dedicated pair of bits as follows:

(Status Bits 17, 19, 21 ... 79) Data Transfer Bit: This bit is normally set to 0. It is pulsed to 1 and back to 0 on successive PLC scans each time a transfer completes successfully. *Do not assume that when the Data Transfer bit goes to 1 that a transfer has just completed during the last scan*. The Data Transfer bit is not closely synchronized in time with the transfer. The bit only indicates that a transfer has occurred during the preceding read (or write) period. A rising edge on the Data Transfer bit indicating that a transfer has completed successfully does not guarantee that the next transfer has not begun or completed. In the case of an Establish Channel command, the CRS word is always updated *before* the Data Transfer bit is set to 1.

(Status Bits 18, 20, 22 ... 80) Channel Error Bit: This bit is set to 1 when an error is detected on this channel. It is set to 0 when the channel is initially established and if the channel resumes normal operation after a transient error condition subsides. The Channel Error bit is also set to 0 when the channel is aborted by an Abort Channel command or when the PLC CPU transitions from RUN to STOP. In the case of an Establish Channel command, the CRS word is always updated *before* the Channel Error bit is set to 1.

Note

For Series 90-30 PLCs, bits 49-80 are reserved for future use.

Communications Status Words

The COMMREQ Status word (CRS word) and the first word of the two Detailed Channel Status words (DCS words) report status and errors in the same format, as shown below. The second word of the DCS words indicates when the channel is active.

The CRS word location is specified in Words 3 and 4 of the Command Block. The DCS words location is specified in the Retrieve Detailed Channel Status Command. The contents of these status words are defined below:

The initial value of the Detailed Channel Status words is all zeros. DCS words are reset to zero when:

- The Ethernet Interface is powered up or restarted
- The CPU transitions from STOP to RUN
- A channel abort COMMREQ aborts the channel

Format of the COMMREQ Status Word (CRS Word)

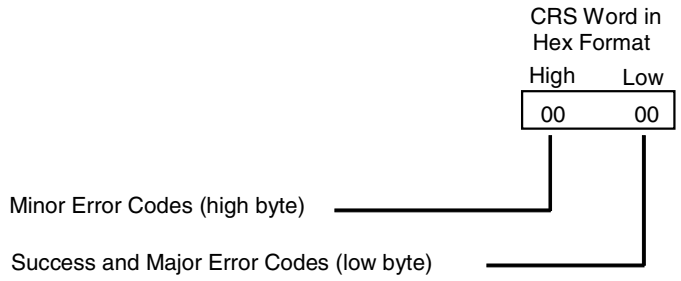

Format of the Detailed Channel Status Words (DCS Words)

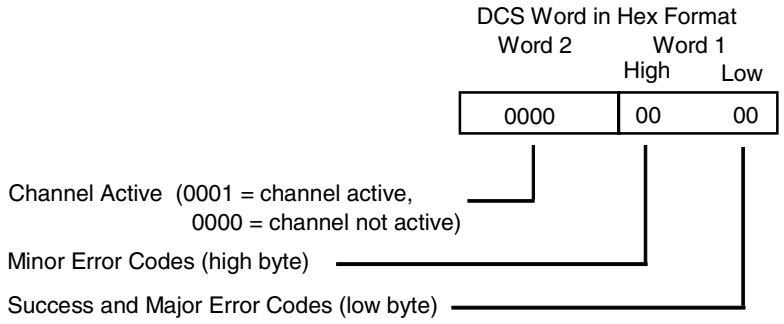

There are several points to remember when interpreting the contents of the COMMREQ Status word and Word 1 of the Detailed Channel Status words:

1. *Display the Status Words in hexadecimal form* to more easily differentiate the high and low bytes. A good way to do this is to use a MOVE WORD function block to display the hexadecimal value within the ladder program.

2. The Ethernet Interface will never send a zero for the COMMREQ Status word to the PLC CPU. The user program should zero the COMMREQ Status word *before* issuing the COMMREQ function and then check for a non-zero value indicating that the Ethernet Interface is responding to the COMMREQ. A good way to do this is to use a MOVE WORD function block to zero the CRS word.

3. A status code of 1 in the low byte and 0 in the high byte indicates that the request was successful. All other non-zero values indicate errors. Refer to the tables below for a complete listing of major and minor error codes.

The following tables list the error codes that are reported in the COMMREQ Status word after the execution of a COMMREQ function. These codes also may appear in Word 1 of the Detailed Channel Status words.

Major Error Codes

Error Status Hexadecimal	Major Error Description
01H	Successful Completion. (This is the expected completion value in the COMMREQ Status word.)
02H	Insufficient Privilege at server PLC. For a Series 90-70 server PLC, the minor error code contains the privilege level required for the service request.
04H	Protocol Sequence Error. The server CPU has received a message that is out of order. *Call GE Fanuc Automation - NA for assistance.*
05H	Service Request Error at server PLC. The minor error code contains the specific error code. See the following table of Minor Error codes.
06H	Illegal Mailbox Type at server PLC. Service request mailbox type is either undefined or unexpected. *Call GE Fanuc Automation - NA for assistance.*
07H	The server PLC CPU's Service Request Queue is full, usually due to heavy CPU loading. The client should retry later. It is recommended that the client wait a minimum of 10 milliseconds before sending another service request.
0BH	Illegal Service Request. The requested service is either not defined or not supported at the server PLC. (This value is returned in lieu of the actual service request error (01H), to avoid confusion with the normal successful COMMREQ completion.) *Call GE Fanuc Automation - NA for assistance.*
11H	SRTP Error Codes at server. An error was detected at the SRTP server. See the following table of Minor Error codes.
82H	Insufficient Privilege at client PLC. For the Series 90-70 PLC, the minor error code contains the privilege level required for the service request.
84H	Protocol Sequence Error. The CPU has received a message that is out of order. *Call GE Fanuc Automation - NA for assistance.*
85H	Service Request Error at the client PLC. The minor error code contains the specific error code. See the following table of Minor Error codes.
86H	Illegal Mailbox Type. Service request mailbox type is either undefined or unexpected. *Call GE Fanuc Automation - NA for assistance.*
87H	The client PLC CPU's Service Request Queue is full. The client should retry later. It is recommended that the client wait a minimum of 10 milliseconds before sending another service request.
8BH	Illegal Service Request. The requested service is either not defined or not supported. (This value is returned in lieu of the actual service request error (01H), to avoid confusion with the normal successful COMMREQ completion.). *Call GE Fanuc Automation - NA for assistance.*
90H	Client API error. See the following table of Minor Error codes.

Minor Error Codes

The meaning of each Minor Error Code depends upon the Major Error Code for which it is defined. Consult the appropriate Minor Error Code table for the indicated Major Error Code.

Minor Error Codes for Major Error Codes 05H (at Remote Server PLC) and 85H (at Client PLC)

Error Status (Hexadecimal)	Service Request Error Description
C105H/C185H	Invalid block state transition.
C305H/C385H	Text length does not match traffic type.
C605H/C685H	Control Program (CP) tasks exist but requestor not logged into main CP.
C705H/C785H	Passwords are set to inactive and cannot be enabled or disabled.
C805H/C885H	Password(s) already enabled and cannot be forced inactive.
C905H/C985H	Login using non-zero buffer size required for block commands.
CA05H/CA85H	Device is write-protected.
CB05H/CB85H	A comm or write verify error occurred during save or restore.
CC05H/CC85H	Data stored on device has been corrupted and is no longer reliable.
CD05H/CD85H	Attempt was made to read a device but no data has been stored on it.
CE05H/CE85H	Specified device has insufficient memory to handle request.
CF05H/CF85H	Specified device is not available in the system (not present).
D105H/D185H	Packet size or total program size does not match input.
D205H/D285H	Invalid write mode parameter.
D505H/D585H	Invalid block name specified in datagram.
D605H/D685H	Total datagram connection memory exceeded.
D705H/D785H	Invalid datagram type specified.
D805H/D885H	Point length not allowed.
D905H/D985H	Transfer type invalid for this Memory Type selector.
DA05H/DA85H	Null pointer to data in Memory Type selector.
DB05H/DB85H	Invalid Memory Type selector in datagram.
DC05H/DC85H	Unable to find connection address.
DD05H/DD85H	Unable to locate given datagram connection ID.
DE05H/DE85H	Size of datagram connection invalid.
DF05H/DF85H	Invalid datagram connection address.
E005H/E085H	Service in process cannot login.
E405H/E485H	Memory Type for this selector does not exist.
E905H/E985H	Memory Type selector not valid in context.
EA05H/EA85H	Not logged in to process service request.
EE05H/EE85H	Could not return block sizes.
EF05H/EF85H	Programmer is already attached.
F005H/F085H	Request only valid in stop mode.
F105H/F185H	Request only valid from programmer.
F205H/F285H	Invalid program cannot log in.
F405H/F485H	Invalid input parameter in request.
F505H/F585H	Invalid password.
F605H/F685H	Invalid sweep state to set.

Minor Error Codes for Major Error Codes 5H and 85H (Continued)

Error Status (Hexadecimal)	Service Request Error Description
F705H/F785H	Required to log in to a task for service.
F805H/F885H	Invalid task name referenced.
F905H/F985H	Task address out of range.
FC05H/FC85H	I/O configuration is invalid.
FE05H/FE85H	No privilege for attempted operation.
FF05H/FF85H	Service request has been aborted.

Minor Error Codes for Major Error Code 11H (at Remote Server PLC)

Error Status (Hexadecimal)	SRTP Error Description
Error codes common to all GE Fanuc PLCs	
0111H	Generic SRTP error.
0211H	The PLC is inaccessible.
0311H	Reserved.
0411H	Unexpected SRTP version encountered in received message.
0511H	Unrecognized SRTP message received.
0611H	Data present in SRTP message which should not contain data.
0711H	Generic resource problem detected.
0811H	SRTP message encountered in inappropriate connection state.
0911H	Generic refusal by backplane driver to handle request.
0A11H	Recognized but unsupported SRTP message received.
0B11H	Lost transaction in server.
0C11H	Error sending SRTP PDU to the client PLC.
Error codes specific to IC697CMM742, IC693CMM321, IC693CPU364, and IC693CPU374	
1411H	Unable to allocate a text buffer from dual port memory.
1711H	Invalid text length detected in a mailbox message.
1811H	Invalid number of destinations detected in a mailbox message.
1911H	Invalid source detected in a mailbox message.
1A11H	Invalid slot number detected in a mailbox message.
1B11H	Invalid rack number detected in a mailbox message.
1D11H	Bad text buffer address in dual port memory.
2111H	Unable to find control data required to send a mailbox message to the PLC.
2211H	Timed out waiting for availability of mail communications with the PLC.
2311H	Invalid task ID detected while attempting to send a mailbox message to the PLC.
2411H	Unable to send mailbox message to PLC because the mail queue is full.
2611H	Unable to communicate with PLC.
2711H	Backplane driver not initialized or unable to acquire a dual port memory semaphore.
2A11H	The backplane driver could not access the PLC.
2B11H	Invalid binding on the message sent to the backplane driver.
2C11H	The message could not be sent to its destination because the mailbox was not open.
2D11H	The maximum number of transfers to the destination is already taking place.

Minor Error Codes for Major Error Code 11H (at Remote Server PLC) - Continued

2E11H	The maximum number of transfers of this transfer type is already taking place.
2F11H	Cannot obtain a backplane transfer buffer.
3011H	Cannot obtain resources other than backplane transfer buffers.
3111H	Connection ID or block transfer ID is not valid.
3211H	Timed out waiting for PLC CPU response.
3311H	The PLC CPU aborted the request.
3411H	An invalid message type was specified.
3511H	The specified task is not registered.
3611H	The mailbox offset specified is invalid.
3711H	The backplane task could not be registered because the message response handler was not specified.
3811H	The backplane task could not be registered because the unsolicited mailbox message handler was not specified.
3911H	The backplane task could not be registered because a required parameter was not specified.
3A11H	More than the allowable byte length in a single transfer.
3B11H	Bad sequence number in the request.
3C11H	Invalid command in request.
3D11H	Response length does not match length specified in the response qualifier.
3E11H	Request failed because the PLC's Service Request Processor is not initialized.
3F11H	Request failed due to an error in the remote device, most likely running out of Dual-Port RAM text buffers.
4011H	Unable to free dual port memory that was allocated for a connection or block transfer area.
4111H	The backplane task could not be registered because the service request handler was not specified.
4211H	No dual port memory was allocated for the connection or block transfer area needed to process the request.
4311H	Failure to register with backplane driver because the requested task is already registered.
4411H	Request failed because an invalid field was identified in the request mailbox qualifier.
E811H	Unable to send request to the PLC because an internal message queue is full.
E911H	Unable to send request to the PLC because the text buffer type is invalid.
EA11H	Unable to send request to the PLC because the mailbox utility function is invalid.
EB11H	Unable to send request to the PLC because the mailbox message is not specified.
EC11H	Unable to send request to the PLC because the internal message queue is not initialized.
FE11H	Request failed due to mailbox error on remote device. The remote device log will have more information.
Error codes specific to Series 90-30 CPU374*	
2911H	The backplane driver is not initialized.
2A11H	The backplane driver could not access the PLC.
2F11H	Request failed due to an invalid parameter detected in the remote device. The remote device log will have more information.
3011H	The specified task is not registered.

Minor Error Codes for Major Error Code 11H (at Remote Server PLC) - Continued

3111H	Failure to register with backplane driver because the requested task is already registered.
3211H	Unable to find resource necessary for backplane driver to process a service request.
3311H	Bad sequence number detected in the service request because it is already in use.
3411H	Invalid data detected that prevents backplane driver from completing a request.
3611H	More than the allowable byte length in a single transfer.
4811H	Memory resource problem detected.
4911H	Network buffer resource problem detected.
4C11H	Error detected while attempting to receive mailbox messages from the PLC.
4D11H	Timed out waiting to obtain a backplane transfer buffer.
4E11H	Timed out waiting to transfer a mailbox message to the PLC.
4F11H	Timed out waiting for PLC CPU response.

Minor Error Codes for Major Error Code 90H (at Client PLC)

Error Status (Hexadecimal)	Application Interface Error Description
0190H	Timeout expired before transfer completed; still waiting on transfer.
0290H	Period expired before transfer completed; still waiting on transfer.
8190H	COMMREQ data block too short for the command.
8290H	COMMREQ data block too short for server PLC node address.
8390H	Invalid server memory type.
8490H	Invalid Program Name.
8590H	Invalid Program Block Name.
8690H	Zero server unit length is not allowed.
8790H	Server unit length is too large.
8890H	Invalid channel number.
8990H	Invalid time unit for period. (Maximum permitted 3965 hours)
8A90H	Period value is too large.
8B90H	Zero server memory starting address is not allowed.
8C90H	Invalid client memory type.
8D90H	Invalid server host address type.
8E90H	Invalid IP address integer value. (Must be 0–255)
8F90H	Invalid IP address class.
9090H	Insufficient TCP connection resources to do request.
9190H	Zero local starting address is not allowed.
9290H	Address length value invalid. Must be 4 for address type.
9390H	COMMREQ data block too short for Program Block name (including 0 pad).
9490H	COMMREQ data block too short for Program name (including 0 pad).
9590H	Internal API error. See PLC Fault Table or exception log for details. This problem may occur due to the Ethernet Interface being asked to perform beyond its capacity. Try transferring less data per message or establishing fewer simultaneous connections.

Section 1: Section 2: Minor Error Codes for Major Error Code 90H (at Client PLC) - Continued

9690H	Underlying TCP connection aborted (reset) by server end point.
9790H	Underlying TCP connection aborted by client end point.
9890H	The remote server has no Service Request Processor.
9A90H	Response to session request did not arrive in proper order.
9B90H	Session denied by server PLC.
9C90H	Data response did not arrive in proper order.
9D90H	Data response had unexpected size.
9E90H	Unrecognized COMMREQ command code.
A190H	Invalid CRS word memory type.
A290H	Failed an attempt to update the CRS word.
A490H	Address length value invalid. Must be 32 for Network Address name type.
B090H	Network Address name length error. The name cannot exceed 31 ASCII characters and must be terminated with a NUL character (zero).
B190H	Specified Network Address name could not be resolved into an IP address.
B390H	Internal name resolution error. See PLC Fault Table or exception log for details.
B590H	The channel the application is trying to access is owned by a different protocol.

Controlling Communications in the Ladder Program

This section provides tips on how to control communications in your ladder program. Only segments of actual ladder logic are included. Topics discussed are:

- Essential Elements of the Ladder Program
- Troubleshooting Your Ladder Program
- Monitoring the Communications Channel
- Managing Channels and TCP Connections

Essential Elements of the Ladder Program

Every ladder program, whether in the developmental phase or the operational phase, should do the following before initiating a COMMREQ function.

1. Initiate the COMMREQ function with a one-shot transitional coil (or transitional contact for Series 90-70 PLCs). This prevents sending the same COMMREQ Command Block more than once.
2. Include at least the LAN Interface OK bit in the LAN Interface Status Word as an interlock contact for the COMMREQ function. You may choose to add more interlocks.
3. Zero the word location you specify for the COMMREQ Status (CRS) word, and the OK (Series 90-70 PLCs only) and FT Outputs of the COMMREQ Function Block before the COMMREQ function is initiated.
4. Move the command code and parameters for the Channel command into the memory location specified in IN input of the COMMREQ Function Block before the COMMREQ function is initiated.

The example ladder program segment starting on the next page illustrates how to incorporate these important points in your program.

COMMREQ Example

In the example logic that follows, the input values for the Block Move Functions are taken from the Establish Read Channel (2003) command Example 1 in this chapter.

Nicknames are used in this example to make the ladder program easier to follow. LANIFOK is bit 16 of the LAN Interface Status bits. All other nicknames can be assigned as you desire.

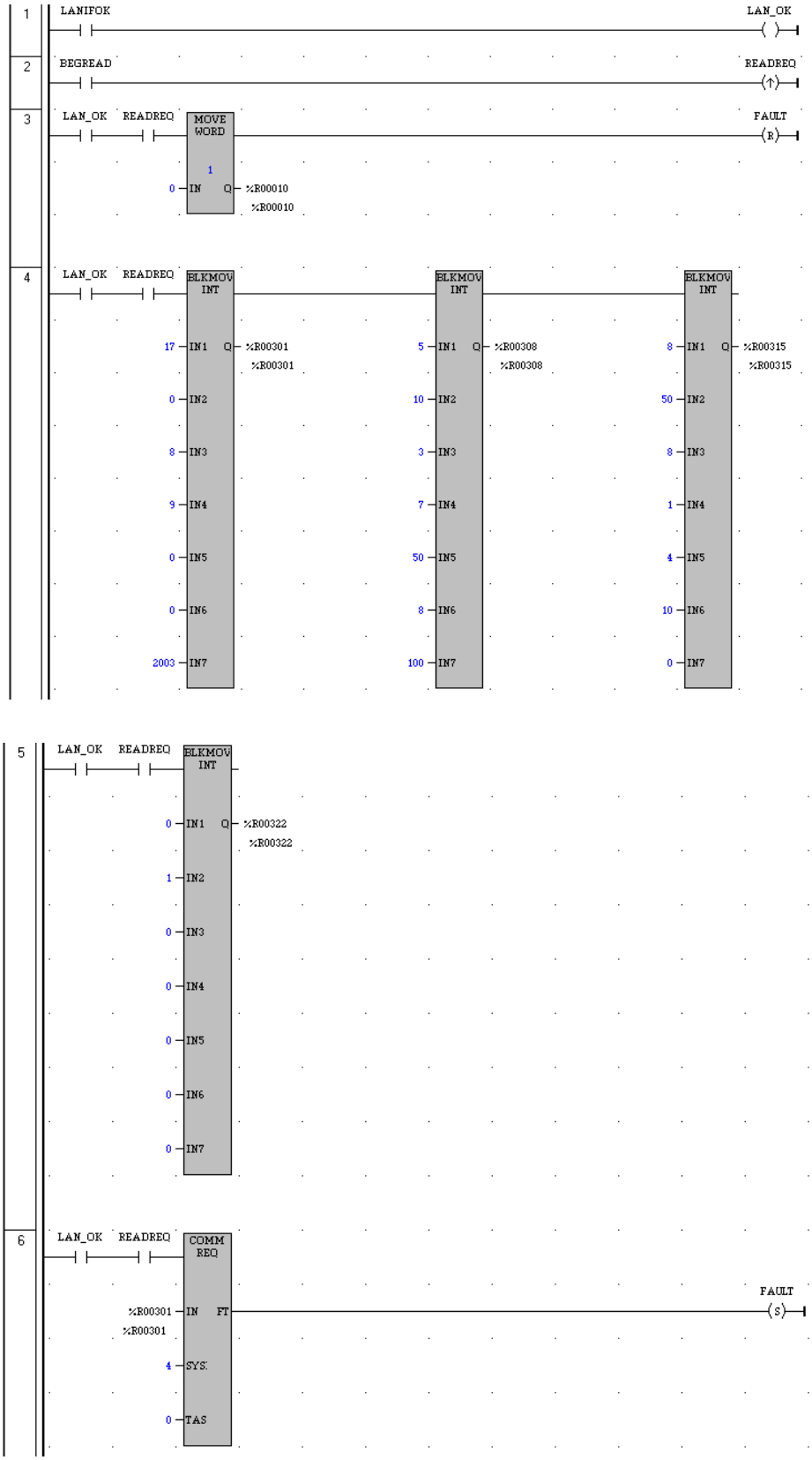
1
LANIFOK
LAN_OK
2
BEGREAD
READREQ
3
LAN_OK
READREQ
MOVE WORD
FAULT
1
0 IN
Q %R00010
%R00010
4
LAN_OK
READREQ
BLKMOV INT
17 IN1
Q %R00301
%R00301
0 IN2
8 IN3
9 IN4
0 IN5
0 IN6
2003 IN7
BLKMOV INT
5 IN1
Q %R00308
%R00308
10 IN2
3 IN3
7 IN4
50 IN5
8 IN6
100 IN7
BLKMOV INT
8 IN1
Q %R00315
%R00315
50 IN2
8 IN3
1 IN4
4 IN5
10 IN6
0 IN7
5
LAN_OK
READREQ
BLKMOV INT
0 IN1
Q %R00322
%R00322
1 IN2
0 IN3
0 IN4
0 IN5
0 IN6
0 IN7
6
LAN_OK
READREQ
COMM REQ
%R00301 IN
FT
%R00301
FAULT
4 SYS
0 TAS

Rung # 1: Input LANIFOK (bit 16 of the LAN Interface Status bits) monitors the health of the Ethernet Interface. If it is OK to send a COMMREQ, the LAN_OK coil is ON. LAN_OK is used as an interlock for Rungs 3–6.

Rung # 2: Input BEGREAD triggers READREQ, which enables execution of the MOVE and COMMREQ functions. READREQ is a one-shot (Positive Transition) coil, activating once when BEGREAD transitions from OFF to ON.

Rung # 3: The MOVE WORD function moves a zero to the CRS word referenced in the Command Block (see rung #4). This clears the CRS word. This rung also resets the FT output coil of the COMMREQ Function Block in rung #6.

It is vital that the CRS Status Word be cleared and the COMMREQ fault output coil be cleared each time before initiating a COMMREQ function.

Rungs # 4–5: The BLKMV INT functions set up the COMMREQ Command Block contents. When these rungs are activated, the constant operands are moved into the memory beginning at the address indicated in the instruction. The constant operands in this example are defined in the Establish Read Channel Example in this chapter.

Rung # 6: The COMMREQ Function Block has three input parameters and one output parameter (two output parameters for Series 90-70 PLCs).

- The IN field points to the starting location of the Command Block parameters (%R00301 in this example).
- The SYSID field of the COMMREQ Function Block defines the target rack and slot of the Ethernet Interface to receive the command data. This is a hexadecimal word value that gives the rack (high byte) and slot (low byte) location of the Ethernet Interface module. In the example ladder diagram shown, which is taken from a VersaPro screen, the first three number places (from left to right) are zeros and are not displayed; only the last number, 4, appears. This indicates rack 0, slot 4. On a Logicmaster screen, all four digits will appear (0004). (For the Series 90-30 CPU364, this value should always be set to 0001 to specify rack 0, slot 1.)
- The TASK field of the COMMREQ Function Block indicates which mailbox task ID to use for the specified rack and slot. For the Series 90-30 Ethernet Interface and the Series 90-70 Ethernet Interface (Type 2), this value should always be zero. For the Series 90-30 CPU364, this value should always be 21 decimal (0015H).
- The FT output (energizes the FAULT coil in this example) is turned ON (set to 1) if there were problems preventing the delivery of the Command Block to the Ethernet Interface. In this case, the other status indicators are not updated for this COMMREQ. For Series 90-70 PLCs only, the OK output may also be monitored to verify the COMMREQ was successfully sent to the Ethernet Interface.

Troubleshooting Your Ladder Program

There are several forms of status data which can be used in your ladder program. The use of the LAN Interface OK bit in the LAN Interface Status Word was described in the ladder program fragment above. Some of the status data can be used to troubleshoot your program in its developmental stage. The two primary sources of this data are the FT Output on the COMMREQ Function Block and the COMMREQ Status word (CRS word).

FT Output is ON

If after executing a COMMREQ Function, the FT Output is ON, then there is a programming error in one or more of the following areas.

- Invalid rack/slot specified. The module at this rack/slot is unable to receive a COMMREQ Command Block.
- Invalid Task ID. For the Series 90-30 Ethernet Interface and the Series 90-70 Ethernet Interface (Type 2), this value should always be zero. For the Series 90-30 CPU364, this value should always be 21 decimal (0015H).
- Invalid Data Block length (0 or greater than 128).

COMMREQ Status Word is Zero (0) and FT Output is OFF

If after executing a COMMREQ function, the CRS word is zero (0) and the FT Output is OFF, then the Command Block has been sent to the Ethernet Interface, but no status has been returned yet. If this condition persists, check the PLC Fault Table for information.

COMMREQ Status Word is Not One (1)

If after executing a COMMREQ function, the CRS word is not one (1) indicating success, then there were:

- Errors in the Command Block (the Channel command code or parameters), *or*
- For an establish command (Establish Read Channel, Establish Write Channel, or Send Information Report), the command parameters were valid but there was an error in establishing a channel.

If the CRS word does not contain a 1 indicating success, then it contains either a 0 or a code indicating what error occurred.

Monitoring the Communications Channel

Once you have a working ladder program, you can use the status data to monitor your communications activity and take the desired action upon certain events. The primary indicators of a communications channel are the Channel Status bits: Channel Error bit and Data Transfer bit. In addition, the CRS word and the DCS words can be used to more precisely troubleshoot any problems that may occur.

Monitoring the COMMREQ Status Word

It is critical to monitor the CRS word for each COMMREQ function you initiate. First, zero the associated CRS word before executing the COMMREQ function. Then when the CRS word becomes non-zero, you know the Ethernet Interface has updated it. If the CRS word is updated to a one (1), then the Command Block was processed successfully by the Ethernet Interface. If the CRS word is updated to a value other than 1, then an error has occurred in processing the Command Block. Do not use data received from a server until the CRS word for that channel is 1 or the Data Transfer bit goes to 1.

Monitoring the Channel Error Bit

This bit (normally 0) is the primary indicator for an error on a channel. It indicates any channel error, fatal or non-fatal. It does not necessarily indicate that the channel is down (idle). If this bit indicates an error:

- Initiate the Abort command and then reinitiate the Read or Write command*, or if the error persists,*
- Initiate the Retrieve Detailed Channel Status command to find out if the channel is down and possibly why it went down.

Keep in mind, however, that the status code may change from between the time the Channel Error bit indicates an error and the time the Retrieve Detailed Channel Status command retrieves the code.

The Channel Error bit for a channel is not meaningful until after the Ethernet Interface updates the CRS word confirming the Read or Write command for that channel. In the case of an Establish Channel command, the CRS word is updated before the Channel Error bit is set to 1.

Monitoring the Data Transfer Bit

Typically you will set up a channel to perform repetitive reads or writes. The Data Transfer bit pulses (0 → 1 → 0) each time there is a successful read or write. This can be an indicator to the ladder program to move the most recent data to another location.

The Data Transfer bit for a channel is not meaningful until after the Ethernet Interface updates the CRS word confirming the Read or Write command for that channel.

Do not use data received from a server until the CRS word confirming the Read command for that channel is 1 or the Data Transfer bit goes to 1. *Do not assume that when the Data Transfer bit goes to 1 that a transfer has just completed during the last scan*. The Data Transfer bit is not closely synchronized in time with the transfer. The bit only indicates that a transfer has occurred in a past scan. A rising edge on the Data Transfer bit indicating that a transfer has completed successfully does not guarantee that the next transfer has not begun or completed.

Sequencing Communications Requests

If the Ethernet Interface receives Command Blocks from the PLC CPU faster than the Interface can process them, the Interface will log an exception event 08, Entry 2=0024H and will log the PLC Fault Table entry:

"Backplane Communications with PLC Fault; Lost Request"

Only one COMMREQ function per channel can be pending at one time. A COMMREQ function is pending from the time it is initiated in the ladder program until its CRS word has been updated to a non-zero value by the Ethernet Interface.

Managing Channels and TCP Connections

In Certain Conditions TCP Connections Can Be Totally Consumed

When you issue a COMMREQ to establish a read or write channel, a TCP connection is created, the transfer(s) are made, then upon completion of all the transfers, the TCP connection is terminated. It takes time to create and to terminate these connections. If an application is constructed so that it rapidly and repeatedly establishes a channel with only one repetition (one transfer), the available TCP connections for the Ethernet Interface may be totally consumed. A "snapshot" of the state of the TCP connections would show some of them being created, some being terminated, and some active, but none available.

Specifically, if your ladder program for issuing COMMREQs is constructed so it does the following, all available TCP connections can quickly be used up:

- The number of repetitions (Word 9 in an Establish Read or Write Channel COMMREQ) is set to 1, *and*
- A new COMMREQ is issued repeatedly and immediately upon completion of the prior one.

Use "Channel Re-Tasking" To Avoid Using Up TCP Connections

The most likely scenario for using up TCP connections is when each successive COMMREQ is directed to the same target device (same IP address or Network Address name). In this case, it is better to establish a channel with the target device once, leave it active, then re-task the channel, even if data transfers take place infrequently. This method will use only one TCP connection.

An additional advantage of re-tasking is that the time and network traffic required to create a channel and its associated TCP connection are not incurred each time a data transfer is required.

The disadvantages to re-tasking are:

- While the TCP connection is open, it is unavailable to the rest of your application, *and*
- The active TCP connection uses up network bandwidth because the active TCP connection generates a small amount of ongoing periodic network traffic.

How To Re-Task a Channel

1. For Establish Read/Write Channel Commands, set the number of repetitions (COMMREQ Word 9) to 2 and set the read/write period (COMMREQ Words 10 and 11) to be longer than the expected time between transfers. For example, if you expect to transfer data about once per minute, set the read/write period to about two minutes. This will cause a TCP connection to be created and held open for two minutes.

2. Set up the ladder program to:

   A. Issue the first COMMREQ and wait for the first transfer to complete, which will be indicated when the COMMREQ Status (CRS) word is changed to 1.

   B. Then before the read/write period expires (at which time the second and final transfer is sent and the TCP connection is dropped), issue the next COMMREQ with the same parameters as specified in step 1. This will "re-task" the channel to use the existing TCP connection instead of opening a new one, and will send another data transfer restarting the timer for the read/write period. Repeat step 2B for each successive data transfer desired.

Chapter 4 Programming Modbus/TCP Channel Commands

This chapter describes how to program communications over the Ethernet network using Modbus/TCP® Channel commands. Details of the Communications Request (COMMREQ) function and the Modbus/TCP Channel commands are presented here. To program SRTP Channel commands, see chapter 3. To use the Modbus/TCP Server capability within the Ethernet Interfact, consult Appendix E about translating PLC reference memory addresses to Modbus Register addresses.

- The Communications Request
- The COMMREQ Function Block and Command Block
- Modbus/TCP Channel Commands
- Status Data
- Controlling Communications in the Ladder Program, which includes an example

Note

This chapter applies *only* to Series 90-30 Ethernet Interface IC693CMM321-FH or later.

This chapter applies *only* to PLCs being used as client PLCs to *initiate* Modbus/TCP communications. No programming is required for Modbus/TCP server operations, however it is necessary to use the "Modbus Register to IC693CMM321 Reference Table Translation" provided in Appendix E to correctly address PLC reference memory using Modbus/TCP to a IC693CMM321.

The Communications Request

"Communications Request" is a term used to describe all the user elements required for correctly *initiating* Channel commands from a Series 90 PLC. This section describes the elements of the Communications Request.

No programming of Communications Requests is required for PLCs acting as servers, which are merely targets of other systems' requests, but do not themselves initiate requests.

Structure of the Communications Request

The Communications Request is made up of the following elements:

- The COMMREQ Function Block (ladder instruction)
- The COMMREQ Command Block
- The Channel Command
- Status Data (COMMREQ Status word, LAN Interface Statusand Channel Status bits)
- The logic program controlling execution of the COMMREQ Function Block

The figure below illustrates the relationship of these elements:

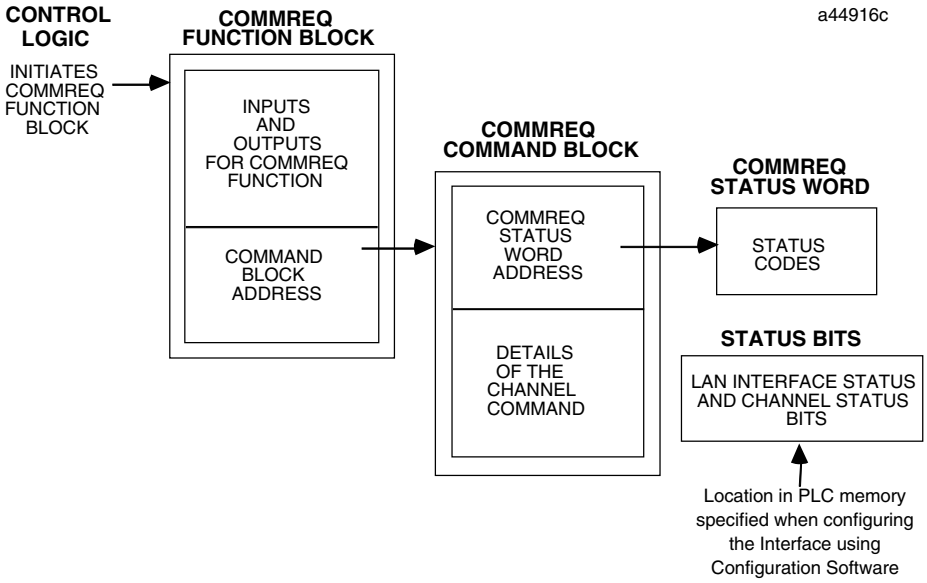

COMMREQ Function Block

The COMMREQ Function Block is the ladder instruction that triggers the execution of the Channel command. In the COMMREQ Function Block, you specify the rack and slot location of the Ethernet Interface, a task value, and the address of a location in memory that contains the Command Block. There is also a fault output on the COMMREQ Function Block that indicates certain programming errors.

COMMREQ Command Block

The COMMREQ Command Block is a structure that contains information about the Channel command to be executed. The Command Block consists of two parts:

Common Area - includes the address of the COMMREQ Status word (CRS word).

Data Block Area - describes the Channel command to be executed.

When the COMMREQ function is initiated, the Command Block is transferred to the Ethernet Interface for action.

Modbus/TCP Channel Commands

The Channel commands are a set of client PLC commands used to communicate with a server. Up to 16 channels (numbered 1–16) can be established by a Series 90-30 Ethernet Interface. The channel number is specified in the Command Block for the Channel command. The channel can be monitored using the Channel Status bits.

Status Data

There are several types of status available to the client PLC logic program.

LAN Interface Status Bits (LIS Bits): The LIS bits comprise bits 1–16 of the 80-bit status area. The location of this 80-bit status area is assigned using the Configuration software in the "Status Address" field. The LIS bits contain information on the status of the Local Area Network (LAN) and the Ethernet Interface itself.

Channel Status Bits: The Channel Status bits comprise bits 17–80 (64 bits) of the 80-bit status area. When used for Modbus/TCP channels, these bits consist of a *connection open* bit and a unused bit, reserved for future use, for each of the 16 channels that can be established. Status bits for unused channels are always set to zero.

COMMREQ Status Word (CRS Word): The 16-bit CRS word will receive the initial status of the communication request. The location of the CRS word is assigned for each COMMREQ function in the COMMREQ Command Block.

FT Output of the COMMREQ Function Block: This output indicates that the PLC CPU detected errors in the COMMREQ Function Block and/or Command Block and did not pass the Command Block to the Ethernet Interface.

The Logic Program Controlling Execution of the COMMREQ Function Block

Care must be taken in developing the logic that controls the execution of the COMMREQ function. The COMMREQ function must be initiated by a one-shot to prevent the COMMREQ from being executed repeatedly each CPU scan, as this will overrun the capability of the Ethernet Interface and possibly require a manual restart. Checking certain status bits before initiating a COMMREQ function is also important. In particular, the LAN Interface OK bit should be used as an interlock to prevent execution of the COMMREQ function when the Ethernet Interface is not operational. Following initiation of a COMMREQ on a channel, no further COMMREQs should be issued to that channel until a non-zero CRS word has been returned to the program from the Ethernet Interface.

Operation of the Communications Request

The figure and text below explains how Communications Requests are executed to complete a data read from the remote Modbus/TCP device. The figure specifically illustrates the successful operation of a data read.

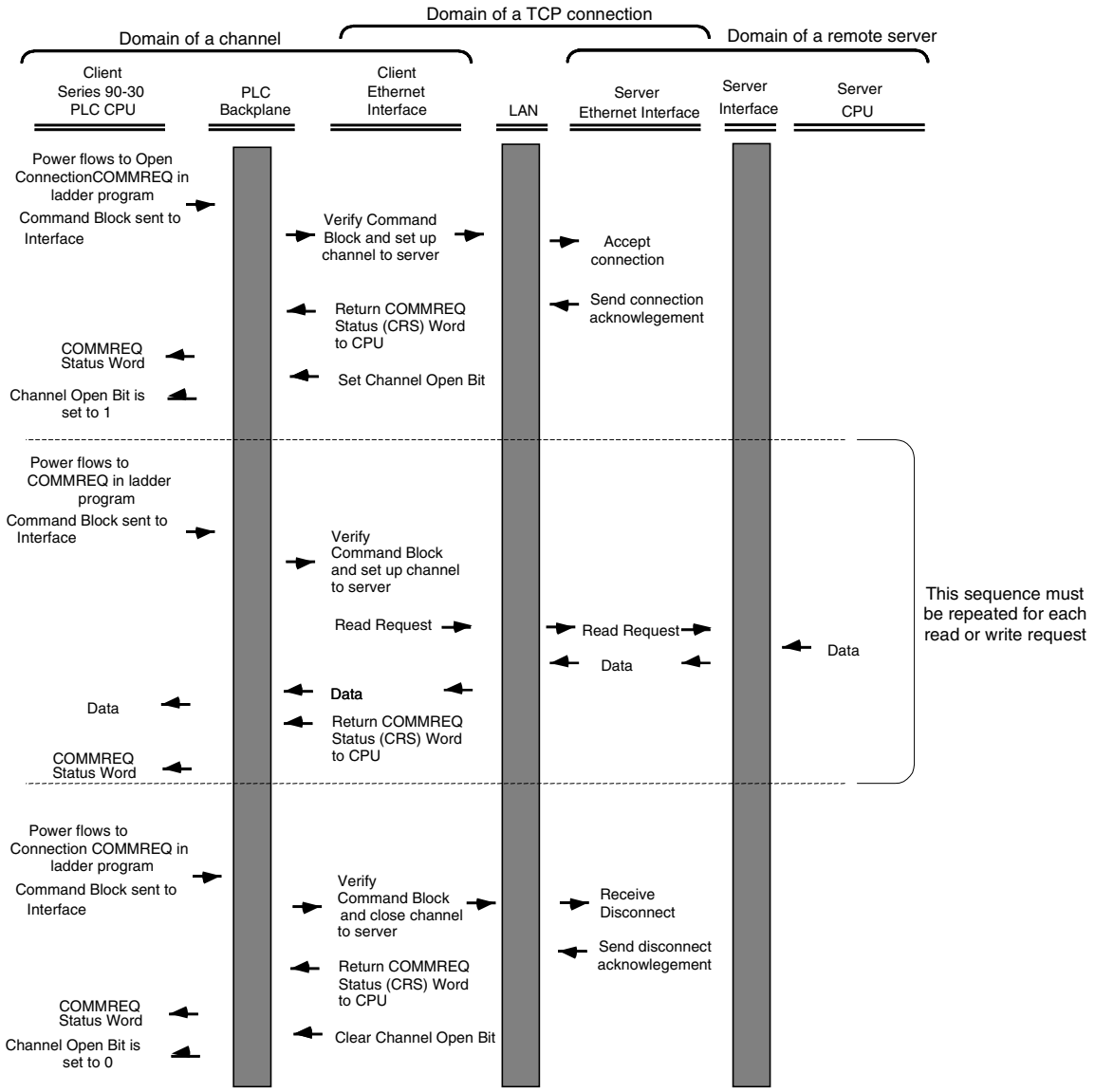

1. A Communications Request begins when there is power flow to a COMMREQ function in the client PLC. At this time, the Command Block data is sent from the PLC CPU to the Ethernet Interface.

2. The COMMREQ Status word (CRS word) is returned immediately if the Command Block is invalid. If the syntax is correct, then the CRS word is returned after the transfer of data..

COMMREQ Function Block and Command Block

This section describes the programming structures common to all Communications Requests: the COMMREQ Function Block and the Command Block.

The COMMREQ Function Block

The Communications Request is triggered when the logic program passes power to the COMMREQ Function Block.

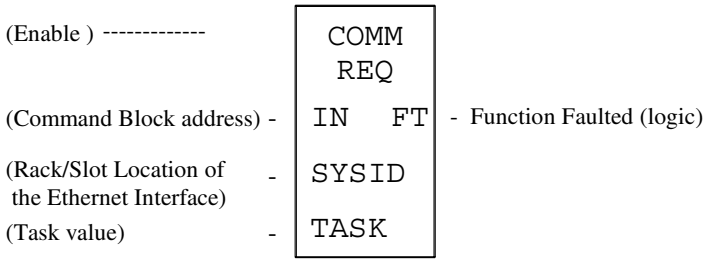

Each of the inputs and outputs are discussed in detail below. It is important to understand that the Command Block address points to the location in memory you have setup as the Command Block.

Enable: Control logic for activating the COMMREQ Function Block. See Section 5 for tips on developing your program.

IN: The location of the Command Block. It can be any valid address within a word-oriented area of memory (%R, %AI, or %AQ for the Series 90-30 Ethernet Interface).

SYSID: A hexadecimal word value that gives the rack (high byte) and slot (low byte) location of the Ethernet Interface. Note that if using GE Fanuc's VersaPro PLC software, the leading zeros in this hexadecimal word value are not displayed on-screen; for example, 0004 will appear as 4.

Examples:

Rack	Slot	Hex Word Value (LM90)	Hex Word Value (VersaPro, CIMPLICITY ME)
0	4	0004H	16#0004
3	4	0304H	16#0304
2	10	020AH	16#020A
4	2	0402H	16#0402

TASK: For the Series 90-30 Ethernet Interface this must always be set to zero.

Caution

Entering an incorrect TASK value may cause the Ethernet Interface to fail.

FT Output: The FT output is set if the PLC CPU (rather than the Ethernet Interface) detects that the COMMREQ fails. In this case, the other status indicators are not updated for this COMMREQ.

The COMMREQ Command Block

When the COMMREQ function is initiated, the Command Block is sent from the PLC CPU to the Ethernet Interface. The Command Block contains the details of a command to be performed by the Interface.

The address in CPU memory of the Command Block is specified by the IN input of the COMMREQ Function Block. This address can be any valid address within a word-oriented area of memory (%R, %AI, or %AQ for the Series 90-30 Ethernet Interface). The Command Block is usually set up using the BLOCK MOVE programming instruction.

The Command Block has the following structure:

Word 1	Data Block Length (words)
Word 2	WAIT/NOWAIT Flag
Word 3	CRS Word Memory Type
Word 4	CRS Word Address Offset
Word 5	*Reserved*
Word 6	*Reserved*
Words 7 and up	Data Block (Channel Command Details)

When entering information for the Command Block, refer to these definitions:

(Word 1) Data Block Length: This is the length in words of the Data Block portion of the Command Block. The Data Block portion starts at Word 7 of the Command Block. The length is measured from the beginning of the Data Block at Word 7, not from the beginning of the Command Block. The correct value for each command, and the associated length of each command, is specified in the next section.

(Word 2) WAIT/NOWAIT Flag: This flag must be set to zero for TCP/IP Ethernet Communications.

COMMREQ Status Word: The Ethernet Interface updates the CRS word to show success or failure of the command. Command words 3 and 4 specify the PLC memory location of the CRS word.

(Word 3) COMMREQ Status Word Memory Type: This word specifies the memory type for the CRS word. The memory types are listed in the table below:

Type	Value (Decimal)	Value (Hex.)	Description
%R	8	08H	Register memory (word mode)
%AI	10	0AH	Analog input memory (word mode)
%AQ	12	0CH	Analog output memory (word mode)
%I	16 70	10H 46H	Discrete input memory (byte mode) Discrete input memory (bit mode)
%Q	18 72	12H 48H	Discrete output memory (byte mode) Discrete output memory (bit mode)
%T	20 74	14H 4AH	Discrete temporary memory (byte mode) Discrete temporary memory (bit mode)
%M	22 76	16H 4CH	Discrete momentary internal memory (byte mode) Discrete momentary internal memory (bit mode)
%G	56 86	38H 56H	Discrete global data table (byte mode) Discrete global data table (bit mode)

(Word 4) COMMREQ Status Word Address Offset: This word contains the offset within the memory type selected. ***The status word address offset is a zero-based number.*** For example, if you want %R1 as the location of the CRS word, you must specify a zero for the offset. The offset for %R100 would be 99 decimal. Note, however, that this is the only zero-based field in the Channel commands.

(Word 5): Reserved. Set to zero.

(Word 6): Reserved. Set to zero.

(Words 7 and up) Data Block: The Data Block defines the Channel command to be performed. For information on how to fill in the Channel command information, see the next section.

Modbus TCP Channel Commands

This section describes the operation of the Channel commands. A detailed description and example of each Channel command is included. There are four Channel commands:

- Open a Modbus/TCP Connection
- Close a Modbus/TCP Connection
- ReadData from a Modbus/TCP Device to the PLC
- Write Data from the PLC to a Modbus/TCP Device

Open a Modbus/TCP Client Connection (3000)

The Modbus/TCP Ethernet Interface transfers data to or from another Modbus/TCP device using a *channel*. Up to sixteen (16) channels are available for Modbus/TCP client communications. The number of channels currently allocated to SRTP communications can limit the number of channels available for client connections in a particular application.

The Open Modbus/TCP COMMREQ requests the communication subsystem to associate a channel with a remote Modbus/TCP device. Using the COMMREQs defined later in this document the PLC may transfer data to and from a remote device.

Once a channel is allocated for Modbus/TCP Client communications, the channel remains allocated. The channel connection is released only when: the application program closes the channel, the channel is automatically closed because the PLC transitions to STOP, or the underlying TCP connection is terminated.

The IP address of the remote Modbus/TCP device is specified in the Open Modbus/TCP COMMREQ using the standard dotted-decimal format. No other IP address format is accepted.

The COMMREQ Status Word (CSR) indicates the success or failure of the Open Modbus/TCP Client Connection COMMREQ. If the COMMREQ requests an invalid channel number or an already allocated channel the COMMREQ fails and the CSR is set to a non-zero value to identify the failure. See the section “Status Data” later in this document for detailed CSR failure codes.

Command 3000 Example

Establish a channel (Channel 5) to a remote Modbus/TCP device at IP address 10.0.0.1. Return the COMMREQ Status word to %R10.

	Dec	(Hex)	
Word 1	00008	(0008)	Length of Channel command Data Block
Word 2	00000	(0000)	Always 0 (no-wait mode request)
Word 3	00008	(0008)	Memory type of CRS word (%R)
Word 4	00009	(0009)	CRS word address minus 1 (%R10)*
Word 5	00000	(0000)	Reserved
Word 6	00000	(0000)	Reserved
Word 7	03000	(0BB8)	Open Modbus/TCP Client Connection
Word 8	00005	(0005)	Channel number (5)
Word 9	00001	(0001)	Remote Device Address Type
Word 10	00004	(0004)	Length of Remote Device Address
Word 11	00010	(0010)	Numeric value of 1st Octet
Word 12	00000	(0000)	Numeric value of 2nd Octet
Word 13	00000	(0000)	Numeric value of 3rd Octet
Word 14	00001	(0001)	Numeric value of 4th Octet

* Word 4 (CRS word address) is the only zero-based address in the Command Block. Only this value requires subtracting 1 from the intended address.

(Word 7) Channel Command Number: Word 7 is the command id for an Open Modbus/TCP Client Connection COMMREQ. If successful a TCP connection with the specified device is allocated.

(Word 8) Channel Number: Word 8 specifies the channel number to allocate for the Modbus/TCP Client connection. Channels 1-16 can be used for Client communications.

(Word 9) Address Type: Word 9 specifies the type of IP Address specified for the remote device. A value of one (1) is required in this word.

(Word 10) Length of IP Address: Word 10 specifies the length of the IP Address. A value of four (4) is required in this word.

(Word 11) IP Address 1st Octet: Word 10 specifies the value of the first octet of the IP Address.

(Word 12) IP Address 2nd Octet: Word 11 specifies the value of the second octet of the IP Address.

(Word 13) IP Address 3rd Octet: Word 12 specifies the value of the third octet of the IP Address.

(Word 14) IP Address 4th Octet: Word 13 specifies the value of the fourth octet of the IP Address.

Close a Modbus/TCP Client Connection (3001)

The application programcloses a Modbus/TCP Client Connection by issuing the Close Modbus/TCP Client Connection COMMREQ. The Close COMMREQ closes the underlying TCP connection and frees the channel for other communication tasks.

An error response is returned if the channel number in the COMMREQ identifies a non-Modbus/TCP Client connection or an inactive channel.

Command 3001 Example

Terminate the Modbus/TCP Client connection established on Channel 5. Return the COMMREQ Status word to %R10.

	Dec	(Hex)	
Word 1	00002	(0002)	Length of Channel command Data Block
Word 2	00000	(0000)	Always 0 (no-wait mode request)
Word 3	00008	(0008)	Memory type of CRS word (%R)
Word 4	00009	(0009)	CRS word address minus 1 (%R10)*
Word 5	00000	(0000)	Reserved
Word 6	00000	(0000)	Reserved
Word 7	03001	(0BB9)	Close Modbus/TCP Client Connection
Word 8	00005	(0005)	Channel number (5)

* Word 4 (CRS word address) is the only zero-based address in the Command Block. Only this value requires subtracting 1 from the intended address.

(Word 7) Channel Command Number: Word 7 requests the Close channel service.

(Word 8) Channel Command Number: Word 8 identifies a channel previously opened with a Open Modbus/TCP Client Connection request. An unallocated channel results in an error response.

Read Data from a Modbus/TCP Device (3003)

The Read Data from a Modbus/TCP Device COMMREQ requests a data transfer from a Modbus/TCP device to the PLC. The Read Data COMMREQ must reference an active Modbus/TCP channel previously established with the Open Modbus/TCP Client Connection COMMREQ.

Registers, Coils or Exception Status data may be read from the remote Modbus/TCP device. The Modbus Function Code specifies the data type. Valid Function Codes for the Read Data COMMREQ are presented in the following table:

Function Code	Description	Base Address	Data Unit Size	Maximum Data Units
1	Read Coils	00001	Bit	2000
2	Read Input Discretes	10001	Bit	2000
3	Read Multiple Registers	40001	Register (16-bit Word)	125
4	Read Input Registers	30001	Register (16-bit Word)	125
7	Read Exception Status	Not Applicable	Byte	Not Applicable

An Address and Length specify the location of the data in the remote device and the number of data units to transfer. The Length is the number of Registers or Coils to transfer. Modbus Function Code 7, Read Exception Status does not require the address as the remove device retrieves the exception status from an internal location.

Coil data is always padded with zeros when less than an even multiple of 16 bits of coil data is returned to the PLC.

Data returned from the remote device is stored in the PLC data area specified in the Read Modbus/TCP Device COMMREQ. Data can be stored in any of the PLC data areas. Refer to page 4-14 for the list of data areas and identification codes for the PLC. Note that the first item referred to in each data area is item 1 not item 0.

The COMMREQ Status Word (CSR) indicates the success or failure of the Read Data COMMREQ. If the COMMREQ requests an invalid channel number or any other field is invalid the COMMREQ fails and the CSR is set to a non-zero value to identify the failure. See the section “Status Data” later in this document for detailed CSR failure codes.

Command 3003 Example 1

Read four Input Registers from Address 30200 in the remote Modbus/TCP device. Store the registers at location %R20. Return the COMMREQ Status word to %R10.

	Dec (Hex)	
Word 1	00008 (0008)	Length of Channel command Data Block
Word 2	00000 (0000)	Always 0 (no-wait mode request)
Word 3	00008 (0008)	Memory type of CRS word (%R)
Word 4	00009 (0009)	CRS word address minus 1 (%R10) *
Word 5	00000 (0000)	Reserved
Word 6	00000 (0000)	Reserved
Word 7	03003 (0BBB)	Read from a Modbus/TCP Device
Word 8	00006 (0006)	Channel number (6)
Word 9	00004 (0004)	Modbus Function Code
Word 10	00008 (0008)	Local PLC Memory Type
Word 11	00020 (0014)	Local PLC Starting Address
Word 12	00200 (00C8)	Address in the Remote Server
Word 13	00004 (0004)	Number of Registers in the Remote Device
Word 14	00001 (0001)	Unit Identifier

* Word 4 (CRS word address) is the only zero-based address in the Command Block. Only this value requires subtracting 1 from the intended address.

(Word 7) Channel Command Number: Word 7 identifies the COMMREQ as a Read Data from Modbus/TCP Device command block.

(Word 8) Channel Number: Word 8 identifies the channel number previously allocated for communication with the remote Modbus/TCP server.

(Word 9) Modbus Function Code: Word 9 specifies Modbus Function Code 4, Read Input Registers.

(Word 10) Local PLC Memory Type: Words 10-11 specify the location in the local PLC where the Ethernet Interface will store data received from the remote device Valid values for Word 10 are listed below.

Type	Value (Decimal)	Description
%R	8	Register memory (word mode)
%AI	10	Analog input memory (word mode)
%AQ	12	Analog output memory (word mode)
%I	16 70	Discrete input memory (byte mode) Discrete input memory (bit mode)
%Q	18 72	Discrete output memory (byte mode) Discrete output memory (bit mode)
%T	20 74	Discrete temporary memory (byte mode) Discrete temporary memory (bit mode)
%M	22 76	Discrete momentary internal memory (byte mode) Discrete momentary internal memory (bit mode)
%SA	24 78	Discrete system memory group A (byte mode) Discrete system memory group A (bit mode)
%SB	26 80	Discrete system memory group B (byte mode) Discrete system memory group B (bit mode)
%SC	28 82	Discrete system memory group C (byte mode) Discrete system memory group C (bit mode)
%S	30 84	Discrete system memory (byte mode) Discrete system memory (bit mode)
%G	56 86	Discrete global data table (byte mode) Discrete global data table (bit mode)

Read-only memory, cannot be written to.

(Word 11) Local PLC Memory Address: Word 11 determines the starting address in the local PLC in which the data from the remote device is to be stored. The value entered is the offset (1-based) from the beginning of PLC memory for the memory type and mode specified in Word 10. This offset will be either in bits, bytes, or words depending on the mode specified. Valid ranges of values depend on the PLC's memory ranges. The user is responsible for assuring that this area is large enough to contain the requested data without overwriting other application data.

(Word 12) Remote Device Address: Word 12 specifies the address in the remote Modbus/TCP device. Note: The function code determines the Modbus address area 3xxxx or 4xxxx, Word 12 is the address within this area (eg. you enter 200 not 30200 in this example).

(Word 13) Number Registers in Remote Device: Words 13 specifies the quantity of registers (16bit words) to read from the remote device.

(Word 14) Unit Identifier: Word 14 is the Modbus/TCP Unit Identifier, a special control code used in a Modbus/TCP message. The default is 1.This value is 1 for most Modbus/TCP devices except if a Ethernet to Serial bridge is used to multidrop to Modbus RTU devices.

Command 3003, Example 2

Read nine (9) Input Discretesfrom Address 10005 in the remote Modbus/TCP server. Store the registers at location %T3(bit mode). Return the COMMREQ Status word to %R10.

	Dec (Hex)	
Word 1	00008 (0008)	Length of Channel command Data Block (8–14 words)
Word 2	00000 (0000)	Always 0 (no-wait mode request)
Word 3	00008 (0008)	Memory type of CRS word (%R)
Word 4	00009 (0009)	CRS word address minus 1 (%R10) *
Word 5	00000 (0000)	Reserved
Word 6	00000 (0000)	Reserved
Word 7	03003 (0BBB)	Read from a Modbus/TCP Device
Word 8	00006 (0006)	Channel number (6)
Word 9	00002 (0002)	Modbus Function Code
Word 10	00074 (004A)	Local PLC Memory Type
Word 11	00003 (0003)	Local PLC Starting Address
Word 12	00005 (0005)	Address in the Remote Device
Word 13	00009 (0009)	Number of Input Discretes to Read from the Remote Device
Word 14	00001 (0001)	Unit Identifier

* Word 4 (CRS word address) is the only zero-based address in the Command Block. Only this value requires subtracting 1 from the intended address.

(Word 7) Channel Command Number: Word 7 identifies the COMMREQ as a Read Data from Modbus/TCP Device command block.

(Word 8) Channel Number: Word 8 identifies the channel number previously allocated for communication with the remote Modbus/TCP server.

(Word 9) Modbus Function Code: Word 9 specifies Modbus Function Code 2, Read Input Status.

(Word 10) Local PLC Memory Type: Words 10-11 specify the location in the local PLC where the Ethernet Interface will store data received from the remote device . Valid values for Word 10 are listed on page 4-14.

(Word 11) Local PLC Memory Address: Word 11 determines the starting address in the local PLC in which the data from the remote device is to be stored. The value entered is the offset (1-based) from the beginning of PLC memory for the memory type and mode specified in Word 10. This offset will be either in bits, bytes, or words depending on the mode specified. Valid ranges of values depend on the PLC's memory ranges. The user is responsible for assuring that this area is large enough to contain the requested data without overwriting other application data.

(Word 12) Remote Device Address: Word 12 specifies the address in the remote Modbus/TCP device.

(Word 13) Number Registers in Remote Device: Words 13 specifies the quantity of input discretes to read from the remote device.

(Word 14) Unit Identifier: Default is 1. This field is typically used by Ethernet to Serial bridges to specify the address of a Modbus Slave on a multidrop link. The Modbus/TCP Unit Identifier is a special control code used in a Modbus/TCP message block. This value is 1 for most Modbus/TCP messages.

Command 3003, Example 3 – Read Exception Status

Read the Exception Status from the remote Modbus/TCP server. Store the ExceptionData at location %Q4(bit mode). Return the COMMREQ Status word to %R10.

	Dec (Hex)	
Word 1	00008 (0008)	Length of Channel command Data Block
Word 2	00000 (0000)	Always 0 (no-wait mode request)
Word 3	00008 (0008)	Memory type of CRS word (%R)
Word 4	00009 (0009)	CRS word address minus 1 (%R10) *
Word 5	00000 (0000)	Reserved
Word 6	00000 (0000)	Reserved
Word 7	03003 (0BBB)	Read from a Modbus/TCP Device
Word 8	00006 (0006)	Channel number (6)
Word 9	00007 (0007)	Modbus Function Code
Word 10	00072 (0048)	Local PLC Memory Type
Word 11	00004 (0004)	Local PLC Starting Address
Word 12	00000 (0000)	Reserved
Word 13	00001 (0001)	Data Size
Word 14	00001 (0001)	Unit Identifier

* Word 4 (CRS word address) is the only zero-based address in the Command Block. Only this value requires subtracting 1 from the intended address.

(Word 7) Channel Command Number: Word 7 identifies the COMMREQ as a Read Exception Status from the Modbus/TCP device.

(Word 8) Channel Number: Word 8 identifies the channel number previously allocated for communication with the remote Modbus/TCP server.

(Word 9) Modbus Function Code: Word 9 specifies Modbus Function Code 7, Read Exception Status.

(Word 10) Local PLC Memory Type: Words 10-11 specify the location in the local PLC where the Ethernet Interface will store data received from the remote device . Valid values for Word 10 are listed on page 4-14.

(Word 11) Local PLC Memory Address: Word 11 determines the starting address in the local PLC in which the data from the remote device is to be stored. The value entered is the offset (1-based) from the beginning of PLC memory for the memory type and mode specified in Word 10. This offset will be either in bits, bytes, or words depending on the mode specified. Valid ranges of values depend on the PLC's memory ranges. The user is responsible for assuring that this area is large enough to contain the requested data without overwriting other application data.

(Word 12) Reserved: Word 12 is reserved and must be set to zero.

(Word 13) Data Size: Word 13 is the data sizeand must be set to 1.

(Word 14) Unit Identifier: Default is 1. This field is typically used by Ethernet to Serial bridges to specify the address of a Modbus Slave on a multidrop link. The Modbus/TCP Unit Identifier is a special control code used in a Modbus/TCP message block. This value is 1 for most Modbus/TCP messages.

Write Data to a Modbus/TCP Device (3004)

The Write Data to a Modbus/TCP Device COMMREQ requests a data transfer from the PLC to a Modbus/TCP server. The Write Data COMMREQ must reference an active Modbus/TCP channel previously established with the Open Modbus/TCP Client Connection COMMREQ.

Registers or Coils may be written to the remote Modbus/TCP device. The Modbus Function Code specifies the data type. Valid Function Codes for the Write Data COMMREQ are presented in the following table:

Function Code	Description	Base Address	Data Unit Size	Maximum Data Units
5	Write Coil	00001	Bit	1
6	Write Single Registers	40001	Register	1
16	Preset Multiple Registers	40001	Register	100

An Address Offset and Length specify the location in the Modbus/TCP device and the number of data units to transfer. The Address Offset is the offset from the Base Address. The Length is the number of Registers or Coils to transfer.

A PLC data area is the source for the data written to the Modbus/TCP device. The source of data can be any of the PLC data areas (see page 4-14).

Function Code 5, Force Single Coil, is the only coil operation supported by the Modbus/TCP Client. This function forces a Coil On or Off. To force a coil off, the value zero (0) is used as the COMMREQ data value. To force a coil on, the value one (1) is used as the COMMREQ data value.

The COMMREQ Status Word (CSR) indicates the success or failure of the Write Data COMMREQ. If the COMMREQ specifies an invalid channel number or any other invalid field the COMMREQ fails and the CSR is set to a non-zero value to identify the failure. See the section “Status Data” later in this document for detailed CSR failure codes.

Command 3004, Example 1 – Set Single Register

Write one register from %AI10 to address 40200 in the remote Modbus/TCP server. Return the COMMREQ Status word to %R10. Use channel 6, a channel previously opened with the Open Modbus/TCP Client Connection COMMREQ.

	Dec (Hex)	
Word 1	00008 (0008)	Length of Channel command Data Block
Word 2	00000 (0000)	Always 0 (no-wait mode request)
Word 3	00008 (0008)	Memory type of CRS word (%R)
Word 4	00009 (0009)	CRS word address minus 1 (%R10)*
Word 5	00000 (0000)	Reserved
Word 6	00000 (0000)	Reserved
Word 7	03004 (0BBC)	Write to a Modbus/TCP Device
Word 8	00006 (0006)	Channel number (6)
Word 9	00006 (0006)	Modbus Function Code – Preset Single Register
Word 10	00010 (000A)	Local PLC Memory Type
Word 11	00010 (000A)	Local PLC Starting Address
Word 12	00200 (00C8)	Address in the Remote Device
Word 13	00001 (0001)	Number of Registers in the Remote Device
Word 14	00001 (0001)	Unit Identifier

* Word 4 (CRS word address) is the only zero-based address in the Command Block. Only this value requires subtracting 1 from the intended address.

(Word 7) Channel Command Number: Word 7 identifies the COMMREQ as a Write Data to remote Modbus/TCP device.

(Word 8) Channel Number: Word 8 identifies the channel number previously allocated for communication with the remote Modbus/TCP server.

(Word 9) Modbus Function Code: Word 9 specifies Modbus Function Code 6, Preset Single Register.

(Word 10) Local PLC Memory Type: Words 10–11 specify the location in the local PLC from where the Ethernet Interface will get the data to be written to the remote PLC. Valid values for Word 10 are listed on page 4-14.

(Word 11) Local PLC Starting Address: Word 11 determines the starting address in the local PLC from which the data is to be written. The value entered is the offset (1-based) from the beginning of PLC memory for the memory type and mode specified in Word 10. This offset will be either in bits, bytes, or words depending on the mode specified. Valid ranges of values depend on the PLC's memory ranges.

(Word 12) Remote Device Address: Word 12 specifies the destination register in the remote device.

(Word 13) Number Registers in Remote Device: Word 13 specifies the quantity of registers to write to the remote device. For Modbus Function Code 6, Preset Single Register this must be set to 1.

(Word 14) Unit Identifier: Default is 1. This field is typically used by Ethernet to Serial bridges to specify the address of a Modbus Slave on a multidrop link. The Modbus/TCP Unit Identifier is a special control code used in a Modbus/TCP message block. This value is 1 for most Modbus/TCP messages.

Command 3004, Example 2 – Force Single Coil

Set coil 10501 ON in the remote Modbus/TCP device using the value at %Q4. Return the COMMREQ Status word to %R10. Use channel 6, a channel previously opened with the Open Modbus/TCP Client Connection COMMREQ.

	Dec (Hex)	
Word 1	00008 (0008)	Length of Channel command Data Block
Word 2	00000 (0000)	Always 0 (no-wait mode request)
Word 3	00008 (0008)	Memory type of CRS word (%R)
Word 4	00009 (0009)	CRS word address minus 1 (%R10)*
Word 5	00000 (0000)	Reserved
Word 6	00000 (0000)	Reserved
Word 7	03004 (0BBC)	Write to a Modbus/TCP Device
Word 8	00006 (0006)	Channel number (6)
Word 9	00005 (0005)	Modbus Function Code – Force Single Coil
Word 10	00072 (0048)	Local PLC Memory Type
Word 11	00004 (0004)	Local PLC Starting Address
Word 12	00501 (01F5)	Address in the Remote Device
Word 13	00001 (0001)	Number of Coils in the Remote Device.
Word 14	00001 (0001)	Unit Identifier

* Word 4 (CRS word address) is the only zero-based address in the Command Block. Only this value requires subtracting 1 from the intended address.

(Word 7) Channel Command Number: Word 7 identifies the COMMREQ as a Write Data to Modbus/TCP device.

(Word 8) Channel Number: Word 8 identifies the channel number previously allocated for communication with the remote Modbus/TCP server.

(Word 9) Modbus Function Code: Word 9 specifies Modbus Function Code 5 Force Single Coil.

(Word 10) Local PLC Memory Type: Words 10–11 specify the location in the local PLC from where the Ethernet Interface will get the data to be written to the remote PLC. Valid values for Word 10 are listed on page 4-14.

(Word 11) Local PLC Starting Address: Word 11 determines the starting address in the local PLC from which the data is to be written. The value entered is the offset (1-based) from the beginning of PLC memory for the memory type and mode specified in Word 10. This offset will be either in bits, bytes, or words depending on the mode specified. Valid ranges of values depend on the PLC's memory ranges.

(Word 12) Remote Device Address: Word 12 specifies the destination coil address in the Modbus/TCP device.

(Word 13). Number Coils in Remote Device: Words 13 specifies the quantity of coils to write to the remote device. For Modbus Function Code 5, Force Single Coil this must be set to 1.

(Word 14) Unit Identifier: Default is 1. This field is typically used by Ethernet to Serial bridges to specify the address of a Modbus Slave on a multidrop link. The Modbus/TCP Unit Identifier is a special control code used in a Modbus/TCP message block. This value is 1 for most Modbus/TCP messages.

Command 3004, Example 3 – Set Multiple Registers

Write the four registers from Discrete Input Memory (%I40 to) address 40200 in the remote Modbus/TCP server. Return the COMMREQ Status word to %R10. Use channel 6, a channel previously opened with the Open Modbus/TCP Client Connection COMMREQ.

	Dec	(Hex)	
Word 1	00008	(0008)	Length of Channel command Data Block
Word 2	00000	(0000)	Always 0 (no-wait mode request)
Word 3	00008	(0008)	Memory type of CRS word (%R)
Word 4	00009	(0009)	CRS word address minus 1 (%R10)*
Word 5	00000	(0000)	Reserved
Word 6	00000	(0000)	Reserved
Word 7	03004	(0BBC)	Write to a Modbus/TCP Device
Word 8	00006	(0006)	Channel number (6)
Word 9	00016	(0010)	Modbus Function Code – Preset Multiple Registers
Word 10	00016	(0010)	PLC Memory Type
Word 11	00040	(0028)	PLC Starting Address
Word 12	00200	(00C8)	Address in the Remote Device
Word 13	00004	(0004)	Number of Registers in the Remote Device
Word 14	00001	(0001)	Unit Identifier

* Word 4 (CRS word address) is the only zero-based address in the Command Block. Only this value requires subtracting 1 from the intended address.

(Word 7) Channel Command Number: Word 7 identifies the COMMREQ as a Write Data to Modbus/TCP device.

(Word 8) Channel Number: Word 8 identifies the channel number previously allocated for communication with the remote Modbus/TCP server.

(Word 9) Modbus Function Code: Word 9 specifies Modbus Function Code 6, Preset Single Register.

(Word 10) Local PLC Memory Type: Words 10–11 specify the location in the local PLC from where the Ethernet Interface will get the data to be written to the remote PLC. Valid values for Word 10 are listed on page 4-14. The value 16 specifies Discrete Input Memory %I(byte mode).

(Word 11) Local PLC Starting Address: Word 11 determines the starting address in the local PLC from which the data is to be written. The value entered is the offset (1-based) from the beginning of PLC memory for the memory type and mode specified in Word 10. This offset will be either in bits, bytes, or words depending on the mode specified. Valid ranges of values depend on the PLC's memory ranges.

(Word 12) Remote Device Address: Word 12 specifies the destination register in the remote Modbus/TCP device.

(Word 13) Number Registers in Remote Device: Words 13 specifies the quantity of registers to write to the remote device.

(Word 14) Unit Identifier: Default is 1. This field is typically used by Ethernet to Serial bridges to specify the address of a Modbus Slave on a multidrop link. The Modbus/TCP Unit Identifier is a special control code used in a Modbus/TCP message block. This value is 1 for most Modbus/TCP messages.

Status Data

This section describes all the status data that is available to the ladder program to determine the state of the Ethernet Interface and its Modbus/TCP channels.

Types of Status Data

There are three main types of status data available to your ladder program:

1. **FT Output of the COMMREQ Function Block.** This output is set if there is a programming error in the COMMREQ Function Block itself, if the rack and slot specified in the COMMREQ SYSID parameter is not configured to contain an Ethernet Interface, or if the data block length specified in the Command Block is out of range. This output also may indicate that no more COMMREQ functions can be initiated in the ladder program until the Ethernet Interface has time to process some of the pending COMMREQ functions.

   If the FT Output is set, the CPU does not transfer the Command Block to the Ethernet Interface. In this case, the other status indicators are not updated for this COMMREQ.

2. **Status Bits.** The status bits are updated in the CPU once each PLC scan by the Ethernet Interface. These bits are generally used to prevent initiation of a COMMREQ function when certain errors occur or to signal a problem on an established channel. The status bits include the LAN Interface Status bits and the Channel Status bits. The starting location of these bits is user-configurable and is set in harware config when the module is configured.

   The LAN Interface Status bits monitor the health of the Ethernet Interface itself, such as the LAN Interface OK bit and the AAUI Fuse Blown bit. The Channel Status bits monitor the health of a channel.

3. **Communications Status Word.** The COMMREQ Status word (CRS word) provides detailed information on the status of the COMMREQ request. The communications status word is not updated in the CPU each scan as are the status bits. They are generally used to determine the *cause* of a communication error after the COMMREQ function is initiated. The cause is reported in the form of an error code described later in this section.The COMMREQ Status word (CRS word) is returned from the Ethernet Interface to the PLC CPU immediately if the Command Block contains a syntax error or if the command is local. The location of the CRS word is defined in the Command Block for the COMMREQ function.

Description of the Status Data

The errors and status reported in each type of status data are described below.

FT Output of the COMMREQ Function Block

The FT Output passes power upon the following errors:

- Invalid rack/slot specified. The module at this rack/slot is unable to receive a COMMREQ.
- Invalid Task ID.
- Invalid Data Block length (zero or greater than 128).
- Too many simultaneous active COMMREQs (overloading either the PLC CPU or the Ethernet Interface).

LAN Interface Status (LIS) Bits

The status bits occupy a single block of memory. The location of this block is specified during configuration of the Ethernet Interface. The first 16 bits of the block are the LAN Interface Status (LIS) bits. The next 64 bits are the Channel Status bits (2 for each channel).

Status Bits	Brief Description
1–7	Reserved
8	AAUI (90-30) fuse blown
9	Any SRTP Channel Error
10–12	Reserved
13	LAN OK
14	Resource problem
15	Reserved
16	LAN Interface OK
17	Connection Open - Channel 1
18	Reserved
...	...
47	Connection Open - Channel 16
48	Reserved
49 –80	Reserved for 90-30

Note

Unless the “LAN Interface OK” bit is set (Status Bit 16), the other status bits are invalid.

(Status Bit 8) AAUI (90-30) Fuse Blown: This bit is set to 1 when a network port fuse is blown. Otherwise, it is set to zero. This failure is also reported to the PLC Fault Table as "LAN interface hardware failure; switched off network".

Operation on other ports is not affected. This problem can be caused by a defective transceiver, shorted network or transceiver cable, or a defective Ethernet Interface. The fuse is not field-replacable so the module must be returned to GE Fanuc for repair.

(Status Bit 9) Any SRTP Channel Error: This bit is set to 1 if there is presently an error on any of the established SRTP channels; i.e., if the individual Channel Error bit is set for any SRTP channel. This bit is not used by Modbus Channels.

(Status Bit 13) LAN OK: This input will be held at the value 1 as long as the Ethernet Interface software is able to communicate on the network. If the network should become inaccessible from this Interface, due either to local or network problems, this bit will be set to 0. If LAN communication becomes possible, it is set to 1.

(Status Bit 14) Resource Problem: This input is set to 1 whenever the Ethernet Interface software experiences a resource problem (i.e., lack of data memory). The bit is reset to 0 on a subsequent PLC sweep. The Ethernet Interface may or may not be able to continue functioning, depending on the severity of the problem. Use the PLC Fault Table to understand the problem. See "Troubleshooting", for further information. In addition, you can use the Station Manager STAT B and LOG commands to further understand the problem.

(Status Bit 16) LAN Interface OK Bit: This input is set to 1 by the Ethernet Interface each PLC scan. If the Ethernet Interface cannot access the PLC, the CPU will set this bit to 0. *When this bit is 0, all other Ethernet Interface Status bits are invalid.*

Each Modbus channel has a dedicated status bit:

(Status Bits 17, 19, 21 ... 79) Connection Open Bit: This bit is 1 when a TCP connection exists for the associated channel. The bit is 0 when the connection does not exist (either never created or has disconnected for some reason). The bit is also set to zero when the PLC goes to STOP, because all connections are automatically closed upon STOP transition.

(Status Bits 18, 20, 22 ... 80) Reserved: When a Channel is in use as an SRTP Channel, these bits are not used.

Note

For Series 90-30 PLCs, bits 49-80 are reserved for future use.

Communications Status Words

The COMMREQ Status word (CRS word) reports status in the format shown below. The CRS word location is specified in Words 3 and 4 of the Command Block.

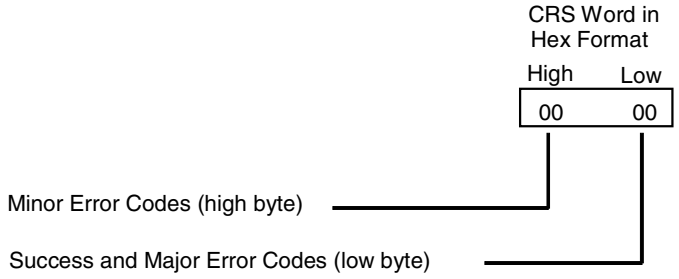

There are several points to remember when interpreting the contents of the COMMREQ Status word:

1. *Display the Status Words in hexadecimal form* to more easily differentiate the high and low bytes. A good way to do this is to use a MOVE WORD function block to display the hexadecimal value within the ladder program.
2. The Ethernet Interface will never send a zero for the COMMREQ Status word to the PLC CPU. The user program should zero the COMMREQ Status word *before* issuing the COMMREQ function and then check for a non-zero value indicating that the Ethernet Interface is responding to the COMMREQ. A good way to do this is to use a MOVE WORD function block to zero the CRS word.
3. A status code of 1 in the low byte and 0 in the high byte indicates that the request was successful. All other non-zero values indicate errors. Refer to the tables below for a complete listing of major and minor error codes.

Major Error Codes

The following tables list the error codes that are reported in the COMMREQ Status word after the execution of a COMMREQ function.

Error Status Hexadecimal	Major Error Description
01H	Successful Completion.
87H	The client PLC CPU's Service Request Queue is full.
8BH	Illegal Service Request. The requested service is either not defined or not supported. (This value is returned in lieu of the actual service request error (01H), to avoid confusion with the normal successful COMMREQ completion.
90H	Client API Error. See the following table of Minor Error codes.
91H	Modbus/TCP Error Codes at server. An error was detected at the Modbus/TCP server. See the following table for the Minor Error codes.

Minor Error Codes

The meaning of each Minor Error Code depends upon the Major Error Code for which it is defined. Consult the appropriate Minor Error Code table for the indicated Major Error Code.

Minor Error Codes for Major Error Codes 90H (Client API Error)

Error Status (Hexadecimal)	Service Request Error Description
8190H	COMMREQ data block too short for the command.
8390H	Invalid server memory type.
8690H	Zero server unit length is not allowed.
8790H	Device unit length is too large.
8890H	Invalid channel number.
8C90H	Invalid client memory type.
8D90H	Invalid server host address type. (Must be 1.)
8E90H	Invalid IP address integer type. (Must be 0-255)
8F90H	Invalid IP Address class. (Developer's note: Something wrong with individual addresses.)
9090H	Insufficient TCP connection resources to do request.
9190H	Zero local starting address is not allowed.
9290H	Address length value invalid. Must be 4 for IP address type.
9590H	Internal API Error. See PLC Fault Table or exception log for details. This problem may occur due to the Ethernet Interface being asked to perform beyond its capacity.
9690H	Underlying TCP connection aborted (reset) by server end point.
9790H	Underlying TCP connection aborted (reset) by client end point.
9D90H	Data response had unexpected size.
9E90H	Unrecognized COMMREQ command code.
A190H	Invalid CRS word memory type.
A290H	Failed an attempt to update the CRS word.
B490H	The channel the application is trying to open is already open by Modbus/TCP.
B590H	The channel the application is trying to access is owned by a different protocol.

Minor Error Codes for Major Error Code 91H (Remote Server Device Error Codes)

Error Status (Hexadecimal)	Error Description
0191H	Illegal Function. The function code received in the query is not an allowable action for the server. This may be because the function code is only applicable to newer controllers, and was not implemented in the unit selected. It could also indicate that the server is in the wrong state to process a request of this type, for example because it was un-configured and is being asked to return register status.
0291H	Illegal Data Address. The data address received in the query is not an allowable address for the server. More specifically, the combination of reference number and transfer length is invalid.
0691H	The server's Service Request Queue is full, or the EEthernet Interface received a Modbus Exception Code 06 SLAVE DEVICE BUSY.
0791H	An internal server error occurred while attempting to process a Modbus request. This corresponds to the Modbus exception 07 NEGATIVE ACKNOWLEDGE

Note: If using a Modbus/TCP Server other than the IC693CMM321 and receive an error of the form xx91H that is not listed in this table, please refer to the documetation provided with the specific server for details on the meaning of the error.

Controlling Communications in the Ladder Program

This section provides tips on how to control communications in your ladder program. Only segments of actual ladder logic are included. Topics discussed are:

- Essential Elements of the Ladder Program
- Troubleshooting Your Ladder Program
- Monitoring the Communications Channel

Essential Elements of the Ladder Program

Every ladder program, whether in the developmental phase or the operational phase, should do the following before initiating a COMMREQ function.

1. Initiate the COMMREQ function with a one-shot transitional coil. This prevents sending the same COMMREQ Command Block more than once.
2. Include at least the LAN Interface OK bit in the LAN Interface Status Word as an interlock contact for the COMMREQ function. You may choose to add more interlocks.
3. Zero the word location you specify for the COMMREQ Status (CRS) word and the FT Outputs of the COMMREQ Function Block before the COMMREQ function is initiated.
4. Move the command code and parameters for the Channel command into the memory location specified in IN input of the COMMREQ Function Block before the COMMREQ function is initiated.

The example ladder program segment starting on the next page illustrates how to incorporate these important points in your program.

COMMREQ Example

The input values for the Block Move Functions in this example are taken from the Open Modbus/TCP Connection (3000), Modbus/TCP Read (3003), and Close Modbus/TCP Connection (3001) Examples in this chapter.

Nicknames are used in this example to make the ladder program easier to follow. LANIFOK is bit 16 of the LAN Interface Status bits. LAN_OK is bit 13 of the LAN Interface Status bits. All other nicknames can be assigned as you choose.

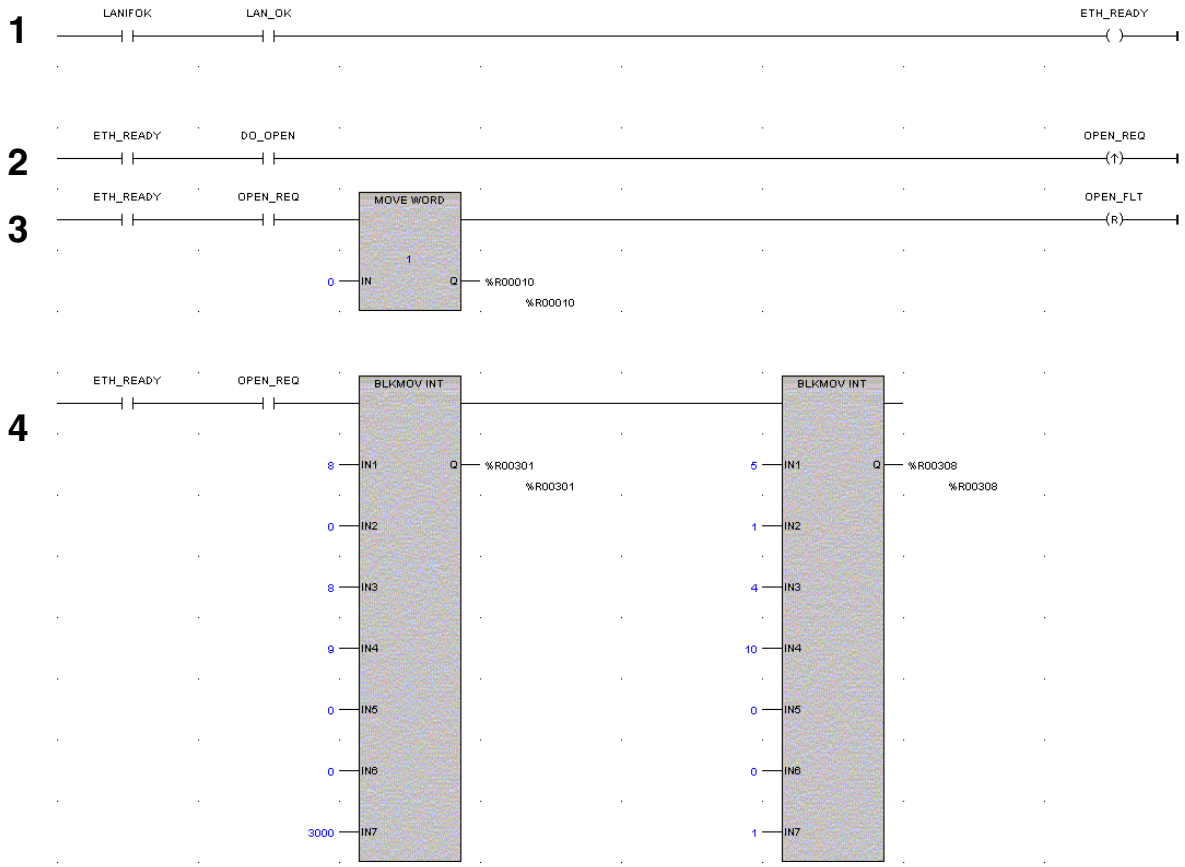

Rung # 1: Input LANIFOK (bit 16 of the LAN Interface Status bits) monitors the health of the Ethernet Interface. Input LAN_OK (bit 13 of the LAN Interface Status bits) monitors the online/offline status of the Ethernet Interface. If both bits are set it is OK to send a COMMREQ and the ETH_READY coil is ON. ETH_READY is used as an interlock for Rungs 2-16.

Rung # 2: When ETH_READY is set, Input DO_OPEN triggers OPEN_REQ, which enables execution of the MOVE and COMMREQ functions for the Open Modbus/TCP Connection Commreq. OPEN_REQ is a one-shot (Positive Transition) coil, activating once when both ETH_READY and DO_OPEN have transitioned from OFF to ON.

Rung # 3: The MOVE WORD function moves a zero to the CRS word referenced in the Command Block (see rung #4). This clears the CRS word. This rung also resets the OPEN_FLT output coil of the COMMREQ Function Block in rung #5.

It is vital that the CRS Status Word be cleared and the COMMREQ fault output coil be cleared each time before initiating a COMMREQ function.

Rung # 4: The BLKMV INT functions set up the COMMREQ Command Block contents. When this rung is activated, the constant operands are moved into the memory beginning at the address indicated in the instruction. The constant operands in this example are defined in the Open Modbus/TCP Connection Example in this chapter.

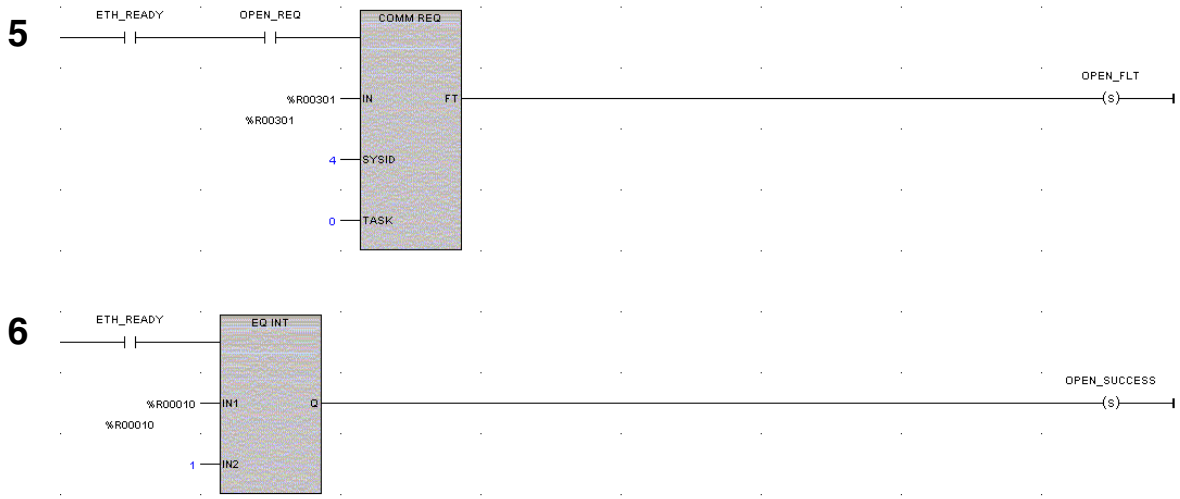

Rung # 5: The COMMREQ Function Block has three input parameters and one output parameter.

- The IN field points to the starting location of the Command Block parameters (%R00301 in this example).
- The SYSID field of the COMMREQ Function Block defines the target rack and slot of the Ethernet Interface to receive the command data. This is a hexadecimal word value that gives the rack (high byte) and slot (low byte) location of the Ethernet Interface module. In the example ladder diagram shown, which is taken from a VersaPro screen, the first three number places (from left to right) are zeros and are not displayed; only the last number, 4, appears. This indicates rack 0, slot 4. On a Logicmaster screen, all four digits will appear (0004).
- The TASK field of the COMMREQ Function Block indicates which mailbox task ID to use for the specified rack and slot. For the Series 90-30 Ethernet Interface this value should always be zero.
- The FT output (energizes the OPEN_FLT coil in this example) is turned ON (set to 1) if there were problems preventing the delivery of the Command Block to the Ethernet Interface. In this case, the other status indicators are not updated for this COMMREQ.

Rung # 6: When ETH_READY is set the CRS word for the Open Modbus/TCP Connection commreq is monitored for a status of 1, indicating that the Open commreq completed successfully. The CRS word change to 1 sets coil OPEN_SUCCESS.

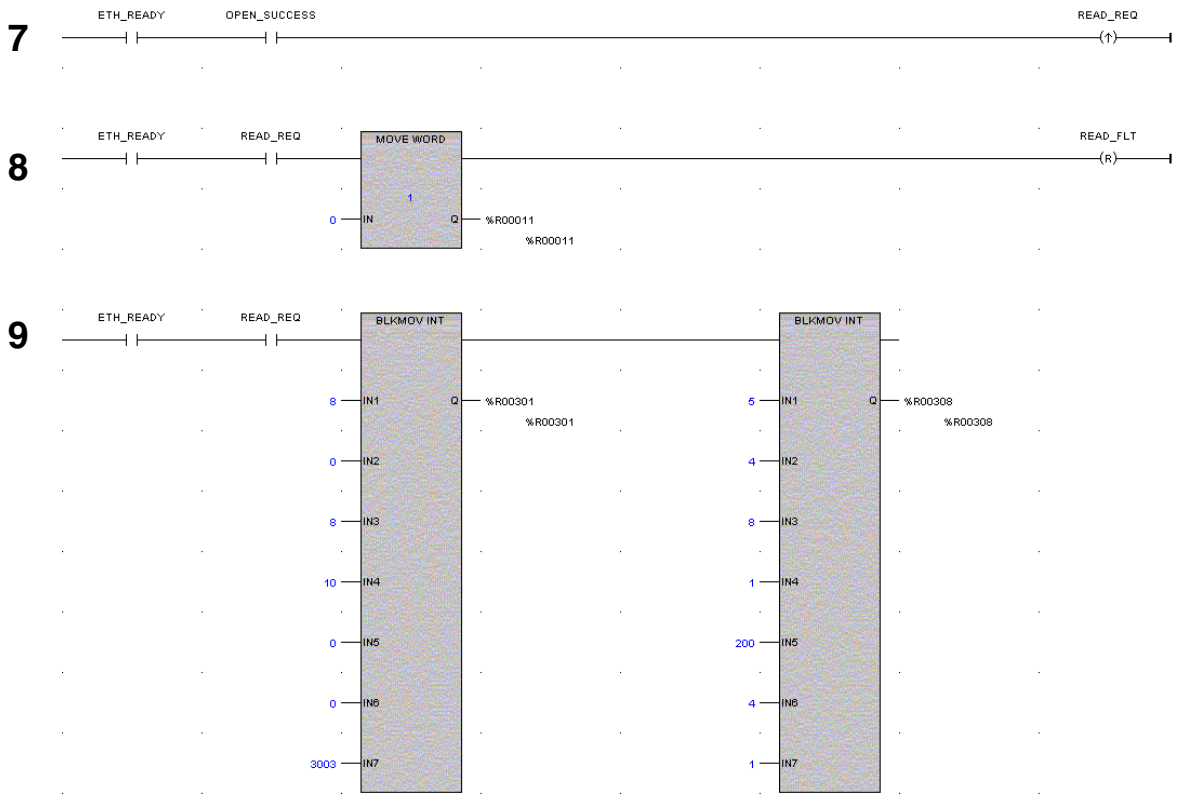

Rung # 7: When OPEN_SUCCESS is set it triggers READ_REQ, which enables execution of the BLKMOV, MOVE and COMMREQ functions for the Modbus/TCP Read Commreq. READ_REQ is a one-shot (Positive Transition) coil, activating once when OPEN_SUCCESS transitions from OFF to ON.

Rung # 8: The MOVE WORD function moves a zero to the CRS word referenced in the Command Block (see rung #9). This clears the CRS word. This rung also resets the READ_FLT output coil of the COMMREQ Function Block in rung #10.

Rung # 9: The BLKMV INT functions set up the COMMREQ Command Block contents. When this rung is activated, the constant operands are moved into the memory beginning at the address indicated in the instruction. The constant operands in this example are defined in the Modbus/TCP Read Example in this chapter.

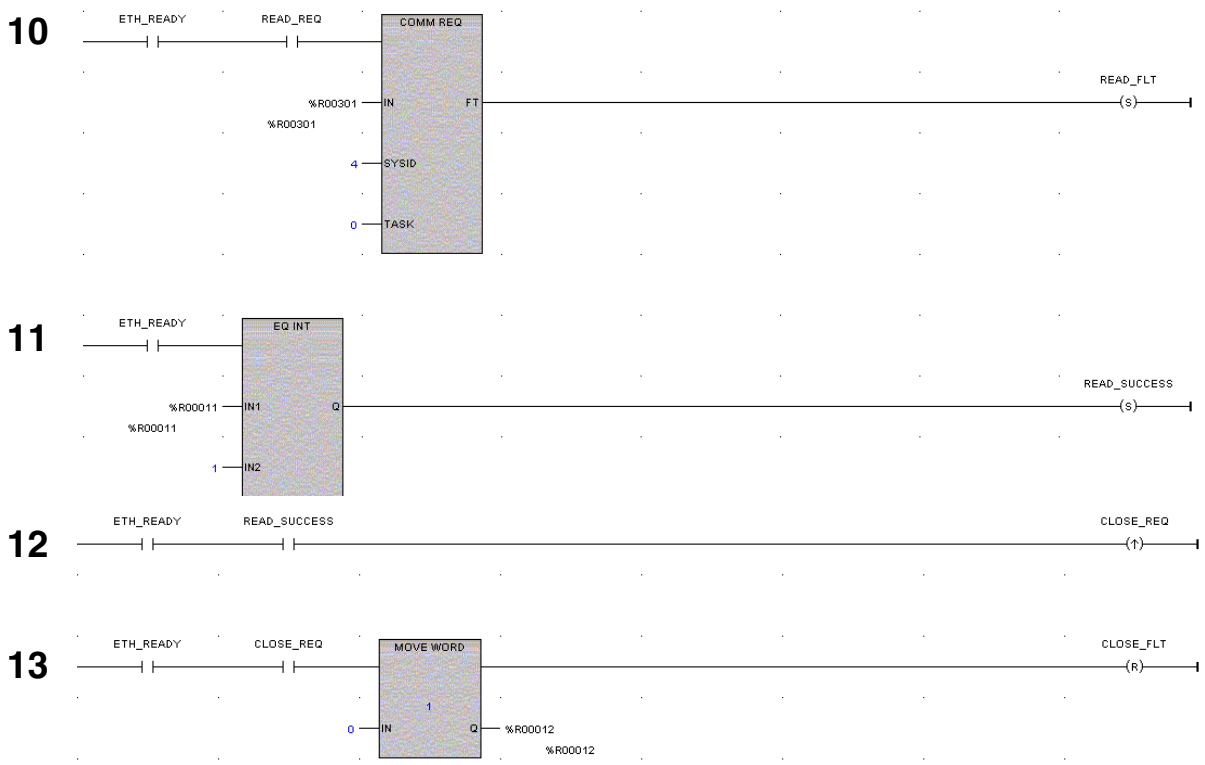

Rung # 10: The COMMREQ Function Block has three input parameters and one output parameter.

- The IN field points to the starting location of the Command Block parameters (%R00301 in this example).
- The SYSID field of the COMMREQ Function Block defines the target rack and slot of the Ethernet Interface to receive the command data. This is a hexadecimal word value that gives the rack (high byte) and slot (low byte) location of the Ethernet Interface module. In the example ladder diagram shown, which is taken from a VersaPro screen, the first three number places (from left to right) are zeros and are not displayed; only the last number, 4, appears. This indicates rack 0, slot 4.
- The TASK field of the COMMREQ Function Block indicates which mailbox task ID to use for the specified rack and slot. For the Series 90-30 Ethernet Interface this value should always be zero.
- The FT output (energizes the READ_FLT coil in this example) is turned ON (set to 1) if there were problems preventing the delivery of the Command Block to the Ethernet Interface. In this case, the other status indicators are not updated for this COMMREQ.

Rung # 11: When ETH_READY is set the CRS word for the Modbus/TCP Read commreq is monitored for a status of 1, indicating that the Read commreq completed successfully. The CRS word change to 1 sets coil READ_SUCCESS.

Rung # 12: When READ_SUCCESS is set it triggers CLOSE_REQ, which enables execution of the BLKMOV, MOVE and COMMREQ functions for the Close Modbus/TCP Connection

Commreq. CLOSE_REQ is a one-shot (Positive Transition) coil, activating once when READ_SUCCESS transitions from OFF to ON.

Rung # 13: The MOVE WORD function moves a zero to the CRS word referenced in the Command Block (see rung #9). This clears the CRS word. This rung also resets the CLOSE_FLT output coil of the COMMREQ Function Block in rung #15.

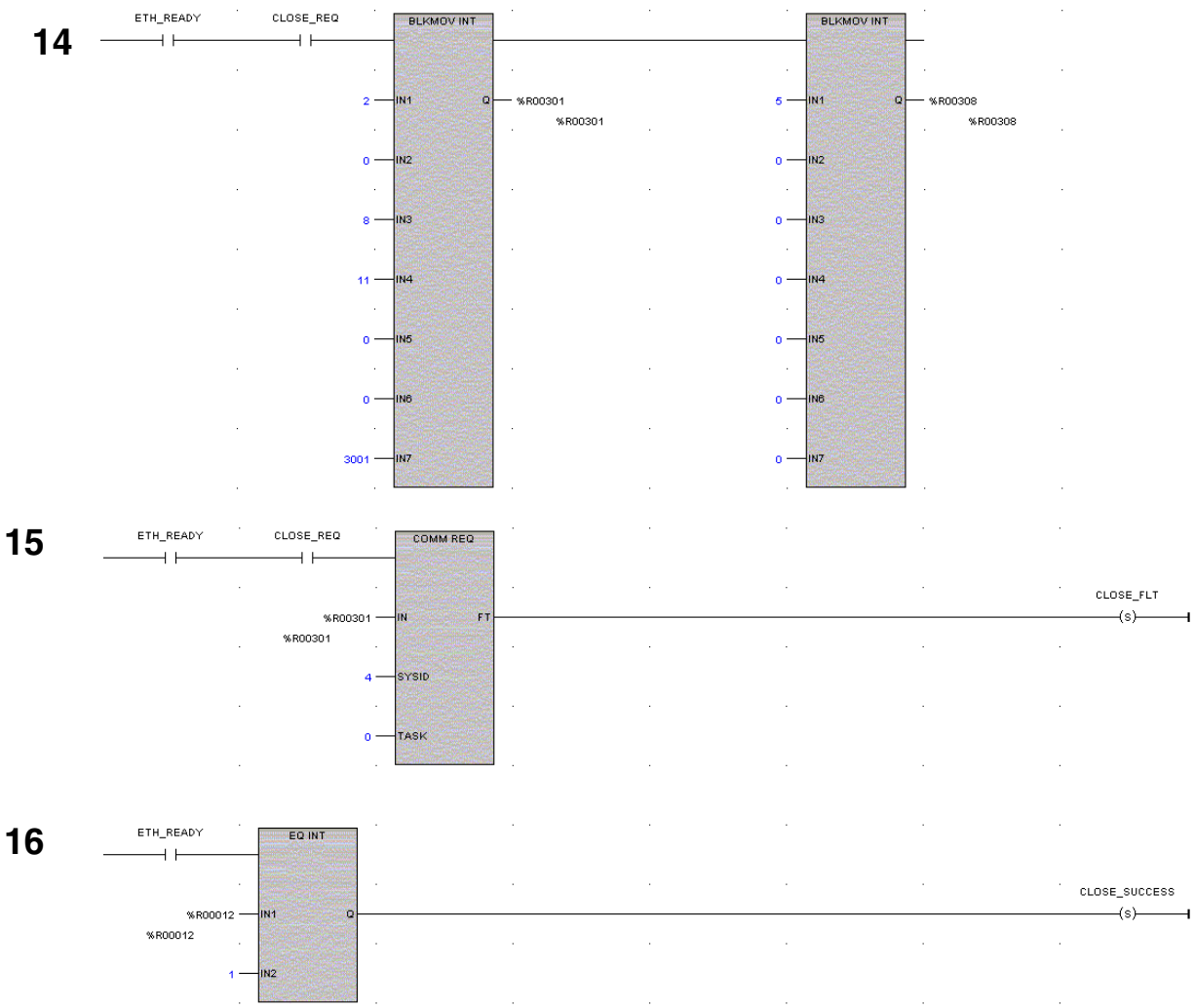

Rung # 14: The BLKMV INT functions set up the COMMREQ Command Block contents. When this rung is activated, the constant operands are moved into the memory beginning at the address indicated in the instruction. The constant operands in this example are defined in the Close Modbus/TCP Connection Example in this chapter.

Rung # 15: The COMMREQ Function Block has three input parameters and one output parameter.

- The IN field points to the starting location of the Command Block parameters (%R00301 in this example).
- The SYSID field of the COMMREQ Function Block defines the target rack and slot of the Ethernet Interface to receive the command data. This is a hexadecimal word value that gives the rack (high byte) and slot (low byte) location of the Ethernet Interface module. In the example ladder diagram shown, which is taken from a VersaPro screen, the first three number places (from left to right) are zeros and are not displayed; only the last number, 4, appears. This indicates rack 0, slot 4.
- The TASK field of the COMMREQ Function Block indicates which mailbox task ID to use for the specified rack and slot. For the Series 90-30 Ethernet Interface this value should always be zero.
- The FT output (energizes the CLOSE_FLT coil in this example) is turned ON (set to 1) if there were problems preventing the delivery of the Command Block to the Ethernet Interface. In this case, the other status indicators are not updated for this COMMREQ.

Rung # 16: When ETH_READY is set the CRS word for the Close Modbus/TCP Connection commreq is monitored for a status of 1, indicating that the Close commreq completed successfully. The CRS word change to 1 sets coil CLOSE_SUCCESS.

Troubleshooting a Ladder Program

As mentioned, there are several forms of status data which can be used in your ladder program. The use of the LAN Interface OK bit in the LAN Interface Status Word was described in the ladder program fragment above. Some of the status data can be used to troubleshoot your program in its developmental stage. The two primary sources of this data are the FT Output on the COMMREQ Function Block and the COMMREQ Status word (CRS word).

FT Output is ON

If after executing a COMMREQ Function, the FT Output is ON, then there is a programming error in one or more of the following areas.

- Invalid rack/slot specified. The module at this rack/slot is unable to receive a COMMREQ Command Block.
- Invalid Task ID. For the Series 90-30 Ethernet Interface this value should always be zero.
- Invalid Data Block length (0 or greater than 128).

COMMREQ Status Word is Zero (0) and FT Output is OFF

If after executing a COMMREQ function, the CRS word is zero (0) and the FT Output is OFF, then the Command Block has been sent to the Ethernet Interface, but no status has been returned yet. If this condition persists, check the PLC Fault Table for information.

COMMREQ Status Word is Not One (1)

If after executing a COMMREQ function, the CRS word is not one (1) indicating success, then there were:

- Errors in the Command Block (the Channel command code or parameters), *or*
- The command parameters were valid but there was an error in completing the request.

If the CRS word does not contain a 1 indicating success, then it contains either a 0 or a code indicating what error occurred.

Monitoring the Communications Channel

Once you have a working ladder program, you can use the status data to monitor your communications activity and take the desired action upon certain events.

Monitoring the COMMREQ Status Word

It is critical to monitor the CRS word for each COMMREQ function you initiate. First, zero the associated CRS word before executing the COMMREQ function. Then when the CRS word becomes non-zero, you know the Ethernet Interface has updated it. If the CRS word is updated to a one (1), then the Command Block was processed successfully by the Ethernet Interface. If the CRS word is updated to a value other than 1, then an error has occurred in processing the Command Block.

Do not use data received from a server until the CRS word for that channel is 1 or the Data Transfer bit goes to 1.

Monitoring the Channel Open Bit

This bit is 1 when a Channel has successfully established a connection with a remote server, and is 0 when a Channel has been closed.. The Channel Open Bit is meaningful whenever the PLC CPU is in run mode and the particular channel is being used by Modbus/TCP. The Channel Open Bit is set at the same time the successful status is returned to the CRS word for the Open Modbus/TCP Connection COMMREQ.

Sequencing Communications Requests

If the Ethernet Interface receives Command Blocks from the PLC CPU faster than the Interface can process them, the Interface will log an exception event 08, Entry 2=0024H and will log the PLC Fault Table entry:

“Backplane Communications with PLC Fault; Lost Request”

Only one COMMREQ function per channel can be pending at one time. A COMMREQ function is pending from the time it is initiated in the ladder program until its CRS word has been updated to a non-zero value by the Ethernet Interface.

Chapter 5 Ethernet Global Data

This chapter discusses how to plan and configure an Ethernet Global Data (EGD) system.

- Overview of EGD
- Configuring EGD
- Adapter Names, Aliases, and Groups
- Exchange Status Word
- Simple Network Time Protocol (SNTP)

Overview of EGD

This section describes Ethernet Global Data in general terms. It also provides key information you need to plan and configure your Ethernet Global Data system.

Ethernet Global Data allows one device (the producer) to share a portion of its internal memory (the exchange) with one or more other devices (the consumers) at a regularly scheduled periodic rate. This exchange is uniquely distinguished by a set of identifiers, the *Producer ID* and *Exchange ID*. The Producer ID is assigned to uniquely identify the Ethernet Global Data device that produces the exchange on the network. The Exchange ID is a value identifying a specific *exchange* within that producing device.

Ethernet Global Data is configured using Windows-based PLC programming software (if supported).

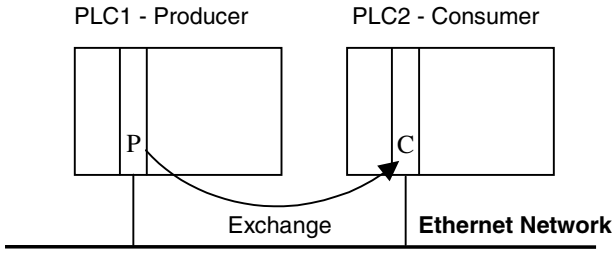

Caution

Ethernet Global Data is designed for simple, efficient communication of sampled data between devices. It is not intended for event notification where the possible loss of a sample of data would be significant. For event notification, it is recommended that an Establish Read/Write Channel command be used. See Chapter 3, "Programming SRTP Channel Commands", for more information.

Note

A single Ethernet Interface can be configured to both produce and consume Ethernet Global Data at the same time, using separate exchanges.

Exchange

The exchange refers to a set of variables or memory locations that contain an internal snapshot of memory within the PLC or other device. The Exchange ID is the value you assign to a particular exchange that identifies it uniquely within a particular producer. You must configure an exchange in both the producer and the consumer.

Configuring the Exchange

Exchanges are configured by filling out parameters in the *Ethernet Global Data* dialog box of the PLC programming software for both the producer PLC and consumer PLC and then storing each configuration to its associated PLC. These parameters define the content of an exchange as well as its operational characteristics. A variable that has already been created in hardware configuration, the program editors, or the Variable Declaration Editor window can be used in an exchange. Or, you can create new variables in the *Ethernet Global Data* dialog box.

Producer

The producer is the device that will periodically produce new samples of data from its local internal memory. The producer is uniquely identified by the Producer ID.

The Producer ID is a dotted-decimal number (for example, 0.0.0.1). Although this number is in IP address form, it is not used as an IP address; it is used simply to uniquely identify a particular PLC on the network. Note that in the case where a Producer ID identifies a PLC producing the exchange, it doesn't matter how many Ethernet Interfaces may be installed in that PLC. For example, a Series 90-70 PLC only has one Producer ID even if it has two or more Ethernet modules installed.

Configuring the Producer ID

The Producer ID is configured via the Local Producer ID field in the *Ethernet Global Data* Rack Operation of the PLC programming software. A default Producer ID value is provided. You can change the value of the Producer ID from the default value to any number in dotted-decimal form. To ensure uniqueness on the network, the default value is:

Series 90-70 PLCs

The same as the IP address of the Ethernet Interface physically closest to the CPU in the rack.

Series 90-30 PLCs

The same as the IP address of the Embedded Ethernet Interface.

Note

When you configure the producer of Ethernet Global Data, you must also supply the adapter name of the Ethernet Interface from which the exchange will flow. This name is configured using the PLC programming software (if supported). You need to specify the adapter name because in Series 90-70 PLCs, more than one Ethernet Interface that supports Ethernet Global Data can be installed.

For a Series 90-30 CPU374, the adapter name is specified as a rack and a slot rather than as a symbolic name.

Consumer

The consumer is the PLC or other device that will update its local internal memory based on the data in an exchange. The consumer is identified at the producer by a Group ID, an IP address, or a symbolic name. These identifiers refer to the specific Ethernet Interface in the consumer. (For Series 90-70 PLCs there can be more than one Ethernet Interface that supports Ethernet Global Data installed in the PLC.)

Group ID: This method is typically used when you want *more* than one consumer to receive the same exchange from a producer. See the topic "Group Usage" for more information.

IP Address: This method is used when you want to identify the consumer's Ethernet Interface using an IP address.

Symbolic Name: This method is used when you want to use local table, DDP, or DNS name resolution to acquire the consumer's IP address. See "Name Resolution" in the chapter: "Network Administration Support", for more information.

Asynchronous Operation of EGD

The production and consumption of EGD is asynchronous. The period timers for the producer and consumer are independent of each other. In addition, the initiation of the production and consumption of EGD can occur at different times.

The figure below illustrates the asynchronous aspect of EGD in all Ethernet Interfaces except the Series 90-30 CPU374. In the Series 90-30 CPU374, there is no consumer period. When data is received, it is made available to the application on the next PLC sweep.

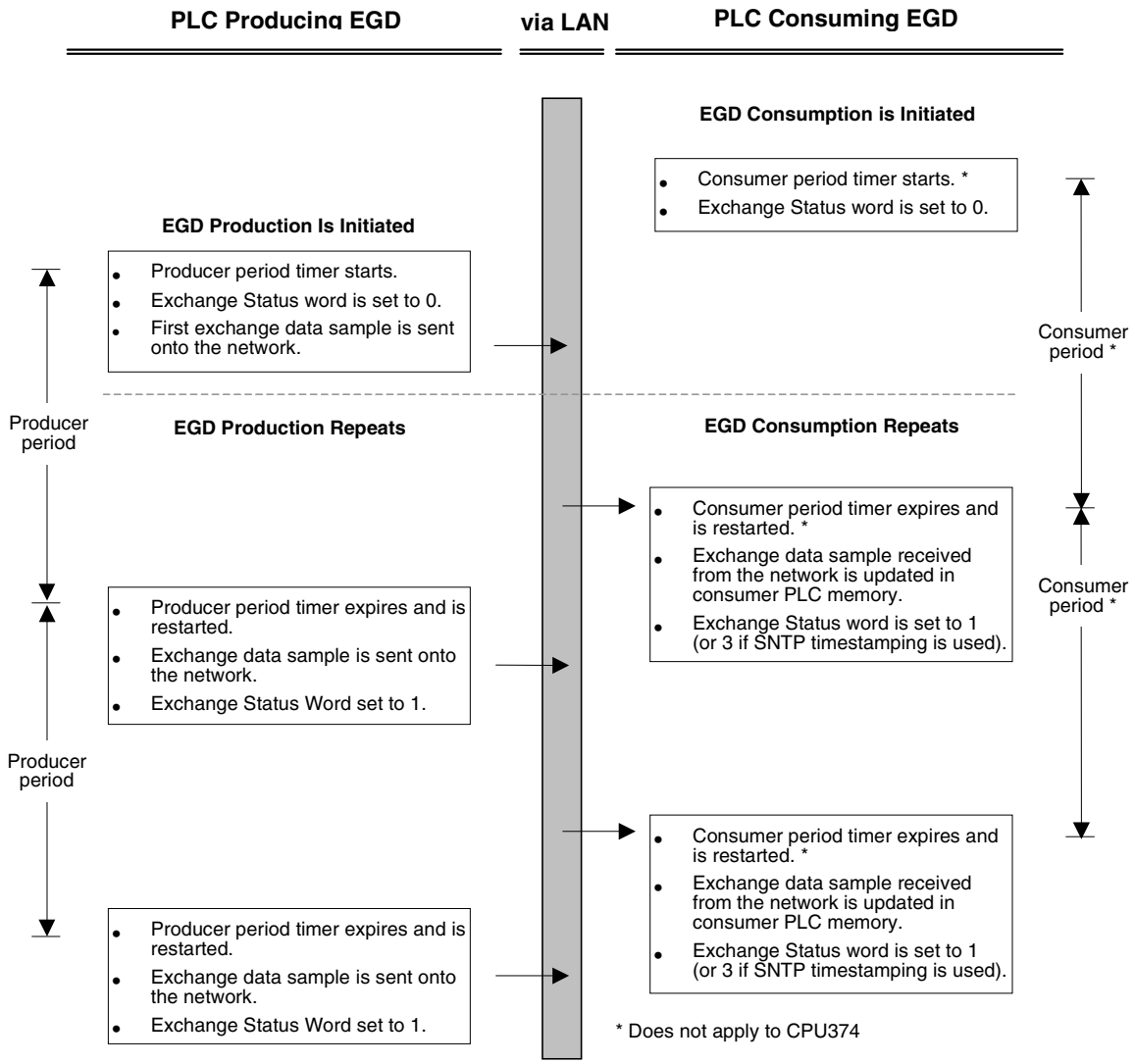

The figure presents a simplified overview of EGD. There are other timing issues regarding data transferred from the Ethernet Interface to the PLC CPU that could be an issue depending on your application. See the topic, “Configuration Planning,” for more information.

Effect of PLC Modes and Actions on EGD Operations

The table below indicates what happens to the configuration and operation of EGD when in different PLC modes and when certain PLC actions take place.

For example, the normal PLC mode for EGD operation is RUN with Outputs enabled. In this PLC mode, EGD remains configured and exchanges are both produced and consumed. If the PLC mode is set to STOP with I/O disabled, the Producer ID remains configured, but production and consumption stop.

When configuration is lost, the EGD configuration must be stored again.

PLC Mode or Action	Producer ID remains configured if…	Configuration-Based Exchanges continue to be…		
		Configured	Produced	Consumed
PLC Mode				
RUN-Outputs Enabled	YES	YES	YES	YES
RUN-Outputs Disabled	YES	YES	NO	YES
RUN-SUSPEND I/O [1]	YES	YES	NO	NO
STOP-I/O Enabled	YES	YES	YES	YES
STOP-I/O Disabled	YES	YES	NO	NO
PLC Action				
RUN-Store Logic	YES	YES	NO[3]	NO[3]
STOP-Store Logic	YES	YES	NO[3]	NO[3]
STOP-Clear Logic	YES	YES	NO[3]	NO[3]
STOP-Config Store	Replaced[2]	Replaced[2]	NO[3]	NO[3]
STOP-Clear Config	NO	NO	NO	NO
PLC Power Cycle	YES	YES	NO[3]	NO[3]
Ethernet Interface Restart	YES	YES	NO[3]	NO[3]

[1] RUN-SUSPEND I/O refers to the SUSIO logic function.

[2] Producer ID and exchange definitions are replaced.

[3] Producer ID and exchanges continue to be configured or not depending on the PLC mode prior to the action.

Note

The DOIO logic function does not affect EGD production or consumption.

Configuration Planning

Producer and Consumer Periods for PLCs

Follow these guidelines for the producer and consumer periods**.**

- **Set the producer period and the consumer period to the same value.** This makes the system easier to troubleshoot and makes network resource usage more efficient.
- **Do not produce and consume data faster than is required by your application.** This reduces the load on the network and on the devices, providing capacity for other transfers. For example, an exchange intended for an HMI host usually does not need to be produced any faster than 500 milliseconds or so. In fact, a 1 to 3 second producer period may be sufficient for this case.

Exchange Limitations and Recommendations

The limitations and recommendations for consumer and producer exchanges are as follows:

Maximum Number of Exchanges

The maximum number of exchanges can be divided up into any combination of producer and consumer exchanges.

- **For a single Series 90-70 PLC system**, which may contain multiple Ethernet Interfaces, the maximum combined number of exchanges that can be configured is 255.
- **For the Series 90-30 CPU364 and the Series 90-30 CPU374**, the maximum number of exchanges that can be configured is 128.

Maximum Data Size of an Exchange

The total data size of a single exchange cannot exceed 1400 bytes. The total size is defined to be the sum of the data lengths of all of the variables within the list.

Number of Variables

- Up to 100 variables can be configured per exchange.
- The minimum is one variable per exchange.
- Different exchanges may have different variables, and they may share some or all of the same variables even if the exchanges are produced and/or consumed at different rates.

It is possible to configure more EGD than a PLC can transfer either due to processing limitations in the Ethernet Interface or in the underlying network (especially in 10Mbit networks). If you configure too much EGD, you will experience high levels of consumer timeouts in some or all of your consumed exchanges. In this case, you must reduce the EGD load. Possible approaches to reducing the load include:

- Increase the production period (especially if the period is more frequent than 2x the minimum time in which the data is needed).
- Redefine the exchanges to use fewer exchanges, each with more data. This can often be achieved by making use of EGD groups (rather than producing a directed exchange to several destinations, a single exchange produced to the group can contain all the data and each consumer can transfer the data of interest from the exchange).
- For Series 90-70 PLCs, consider adding an addition Ethernet Interface to the rack and spreading the EGD exchanges.

Allowable Data Types in Exchanges

Boolean type variables are not allowed; neither are Boolean-Array variables. If discrete point references such as %I or %Q are used to define a variable, you must define them as Byte-Array, Word-Array, or Dword-Array variables. This implies that a variable consisting of discrete point references must be defined in blocks of 8 points if it is defined as a Byte-Array, 16 points if Word-Array, and 32 points if DWord-Array. Discrete memory must be byte-aligned. Valid memory types are listed later in this chapter.

Producer and Consumer Period Ranges

Producer and consumer periods may be configured to be between 10 milliseconds (2 milliseconds for the Series 90-30 CPU374) and one hour (inclusively). They should be configured in increments of 10 milliseconds (2 milliseconds for the Series 90-30 CPU374). If not, they are rounded to the next highest 10-millisecond increment during operation (2 milliseconds for the Series 90-30 CPU374). For example, a configuration value of 11 (intended to be 11 milliseconds) will be treated the same as 20 ms by the Ethernet Interface (12 milliseconds for the Series 90-30 CPU374).

For the Series 90-30 CPU374, you may also configure the producer period with the value of zero. A zero period is interpreted as producing the data "as fast as possible". For the CPU374, zero period production is scheduled every scan or every 2ms, whichever is slower. In a PLC with rapid scan times, scheduling a produced exchange at zero results in a very high load on the network and on the Ethernet Interface, which may degrade overall Ethernet performance. Scheduling multiple exchanges for a zero period in a PLC with a low scan time can result in the Ethernet Interface being unable to produce all the required data.

Effect of Enabling User Interrupts

If user interrupts are enabled (applies to Series 90-70 only), the data values of a variable greater than 256 bytes are not guaranteed to be “atomic” (or “coherent”, meaning their snapshot is taken at the same instant). If atomic data transfer is desired for a variable within the exchange, disable user interrupts or limit the size of the variable to 256 bytes or less.

Update Timeout Period

Set the update timeout period for the consumer to twice the producer period and at least 20 milliseconds greater than the consumer period. Otherwise, the PLC may occasionally falsely report refreshment faults. Use zero for the update timeout period of a consumed exchange to disable timeout detection.

General PLC Timing Considerations when using EGD

When designing applications using EGD, it is important to understand that the Ethernet Interface and PLC CPU share internal memory for EGD operations. This shared memory interface is represented by the diagram below.

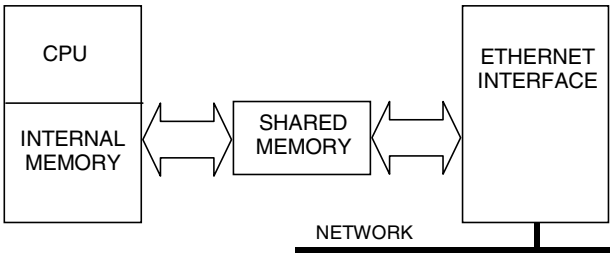

Timing Considerations for the Series 90-30 CPU364 and Series 90-70 Ethernet Interface

In a producing PLC, the CPU updates shared internal memory with a data sample after its own period timer expires, affecting the length of the PLC sweep only for that particular exchange update. Since an update occurs only once per period, this mode has little effect on the average sweep time. When the Ethernet Interface's period timer expires, it produces the data sample from shared internal memory onto the network. Since the CPU's period timer and the Ethernet Interface's period timer are asynchronous, a produced data sample could lag somewhat behind the actual content of the CPU reference tables.

In a consuming PLC, shared internal memory is updated as soon as the Ethernet Interface gets a data sample from the network. After the CPU period timer expires, the CPU updates its reference tables from shared internal memory.

Timing Considerations for the Series 90-30 CPU374

In the Series 90-30 CPU374, there is no asynchronous timer running in the CPU for either producer or consumer. In a producing PLC, the Ethernet Interface requests data from the CPU when the Ethernet Interface's timer expires. The CPU updates the requested data in the shared memory on the next PLC sweep and that data is transferred on the network as soon as it is available.

In a consuming PLC, the Ethernet Interface updates data in the shared memory as soon as it gets a data sample from the network, then it notifies the CPU to transfer the data on its next sweep. The data is transferred to the CPU reference tables on the next sweep.

Naming Conventions

If you follow consistent naming conventions for your Ethernet Global Data system, it will be much easier to configure EGD. These naming conventions include the following items:

- **Equipment Folder Name** – This is the name of the program folder that you assign when creating a hardware configuration and program for a PLC. It can represent the name of a PLC.
- **Producer ID** – This identifies the EGD producer and is configured in the Ethernet Global Data dialog box.
- **Adapter Name** – The adapter name is configured in the Module Parameters dialog box for the Ethernet Interface. This name is also referenced in the Ethernet Global Data dialog box of the PLC programming software. Note that for the CPU374 this field is not editable and displays the rack and slot of the CPU.
- **Alias** – Configured in the *Name Resolution and Routing Table* Rack Operation in the PLC programming software if you have decided to use local name table name resolution to connect to consumers.
- **CCU Device Name** – This is the name used by the Communication Configuration Utility (CCU), which is part of the Windows-based PLC programming software and Host Communication Toolkit, to identify an Ethernet Interface within a PLC to which you want to connect. When you configure these names, use a name similar to the adapter name of the Ethernet Interface.

When you assign names for these parameters, use names that help to easily recognize their relationship to one another.

For example, if you identify the PLCs in your system using an Equipment folder name such as PLC1, PLC2, and so on, it will be easier to recognize these PLCs when configuring EGD if you configure Local Producer IDs with numbers such as 0.0.0.1, 0.0.0.2, and so on.

Also, it is recommended to use a similar name for both the adapter name and the Communication Configuration Utility (CCU) device name for an Ethernet Interface. This will make it easier for you to recognize the PLC you want to connect to for configuring EGD. If you configure the CCU device name while an Equipment folder is open, the folder name will be suggested as the CCU device name.

Naming Conventions – EXAMPLE

Your Name for the PLC (Equipment Folder Name)	Local Producer ID	Ethernet Interface(s)		
		Network Adapter Name	CCU Device Name	IP Address
PLC1	0.0.0.1	PLC1_A*	PLC1_A*	10.0.0.23
PLC1	0.0.0.1	PLC1_B*	PLC1_B*	10.0.0.34
PLC2	0.0.0.2	PLC2	PLC2	10.0.0.41
PLC3	0.0.0.3	PLC3	PLC3	10.0.0.50

* There can be more than one Ethernet Interface (Type 2) in a Series 90-70 PLC

Before You Configure EGD Exchanges

Before you begin configuring EGD exchanges you will need to collect a considerable amount of information about the PLCs in your system. It is a good idea to record this data so that when you are ready to configure the exchanges in the PLC programming software, all pertinent information will be easily found. The tables that follow represent one way of recording this information. Use these tables or design your own method for recording the information outlined below.

Record Your EGD System Information

- Determine for each PLC what data needs to be produced and consumed.
- Make a list of the adapter names and IP addresses of the Ethernet Interfaces in the PLCs that are being used to produce or consume the exchanges. (See the topic "Naming Conventions" if these names have not already been configured.)
- Determine whether you will identify EGD consumers using a Group ID, IP address, or symbolic name.
- If you choose to use symbolic names, you can use either local name table, DDP, or DNS name resolution.

  - Local name table name resolution uses aliases configured locally in each producer PLC in the *Name Resolution and Routing Table* Rack Operation in the PLC programming software (if supported). If using aliases make a list of them.
  - DDP uses the adapter name of the remote Ethernet Interface for name resolution. The adapter name of an Ethernet Interface is assigned in Module Configuration.
  - DNS name resolution uses a DNS server at which DNS names are configured. If using DNS names, make a list of them. Note that DNS names must be different than the adapter name configured for the Ethernet Interface and must be defined at the remote DNS name server before use.

  See "Name Resolution" in the chapter: "Network Administration Support" for more information.
- Define the exchanges of data you want to configure.
- Make a list of the CCU device names used to connect to the producer and consumer PLCs. (See the topic "Naming Conventions" if these names have not already been configured.) CCU device names are the names used to identify the Ethernet Interface as configured in the Communication Configuration Utility.

Use tables similar to the following to record this information.

Producer/Consumer Information for Entire EGD System – EXAMPLE

Your Name for the PLC (Equipment Folder Name)	P	C	Local Producer ID	Ethernet Interface(s)		
				Network Adapter Name	CCU Device Name	IP Address
PLC1	X	X	0.0.0.1	PLC1_A	PLC1_A	10.0.0.23
PLC1	X		0.0.0.1	PLC1_B	PLC1_B	10.0.0.34
PLC2		X	0.0.0.2	PLC2	PLC2	10.0.0.41
PLC3	X	X	0.0.0.3	PLC3	PLC3	10.0.0.50

P=Producer C=Consumer

Recording Exchange Information

The produced/consumed exchanges tables below were designed with columns that match up with the fields in the Ethernet Global Data dialog box.

These tables contain a definition of ALL the exchanges in the entire EGD system. The Local Producer ID column indicates in which PLC a given exchange is to be configured.

Record Your Produced Exchange Information

The first two rows of data in the Produced Exchanges table indicate that there are two produced exchanges for the PLC identified as 0.0.0.1. The third row of data indicates another exchange produced by the PLC identified as 0.0.0.3.

Produced Exchanges Information – EXAMPLE

Local Producer ID	Exchange ID	Local Adapter Name	Consumer Type	Consumer Address	Send Type	Producer Period	Reply Rate	Status Word
0.0.0.1	1	PLC1_A	IP Address	10.0.0.50	Always	1000	0	Stat1
0.0.0.1	3	PLC1_B	IP Address	10.0.0.41	Always	1000	0	Stat3
0.0.0.3	2	PLC3	IP Address	10.0.0.23	Always	1000	0	Stat2

Record Your Consumed Exchange Information

The first row of data in the Consumed Exchanges table indicates that there is one consumed exchange for the PLC identified as 0.0.0.1 and that the remote producer is PLC 0.0.0.3. The other two rows indicate consumed exchanges in PLCs 0.0.0.2 and 0.0.0.3, each with the remote producer, PLC 0.0.0.1.

Consumed Exchanges Information – EXAMPLE

Local Producer ID	Exchange ID	Local Adapter Name	Remote Producer ID	Group ID	Consumer Period	Update Timeout	Status Word	Time Stamp
0.0.0.1	2	PLC1_A	0.0.0.3	0	1000	2000	Stat2	Time2
0.0.0.2	3	PLC2	0.0.0.1	0	1000	2000	Stat3	Time3
0.0.0.3	1	PLC3	0.0.0.1	0	1000	2000	Stat1	Time1

Configuring EGD

This section describes how to configure EGD using the Ethernet Global Data rack operation in the Windows®-based PLC programming software (if supported).

The main topics covered are:

- Exchange Definitions
- Configuring Ethernet Global Data (with examples)

Exchange Definitions

The produced and consumed data exchange definitions that follow describe the fields to be filled in via the Ethernet Global Data rack operation in the PLC programming software.

Produced Data Exchange Definition

The information to be sent by the producer and the exchange details are defined in the Produced Exchanges tab of the Ethernet Global Data dialog box.

The produced data exchange definition contains the following information:

Field	Details
Local Producer ID	A value in the form of a dotted-decimal IP address that uniquely identifies the Ethernet Global Data device across the network. For Series 90-70 PLCs, the default is the same as the IP address of the Ethernet Interface closest to the CPU in the main rack. For Series 90-30 PLCs, the default is the same as the IP address of the CPU364 or CPU374 with Embedded Ethernet Interface. The default value can be changed.
Exchange ID	A numerical value assigned by the user to identify a specific exchange to be sent by the producing device.
Adapter Name	Identifies the adapter name of the Ethernet Interface within the producing PLC. For the CPU374 this field is not editable and displays the rack and slot of the CPU.
Consumer Type	Specifies whether the data's destination will be identified by an alias (if aliases have been assigned), IP address, symbolic name, or Group ID.
Consumer Address	Identifies the data's consuming device, based on the type selected: **Alias:** a name assigned in the Alias tab of the Name Resolution dialog box and selected from the drop-down list for this field. **IP Address:** a dotted-decimal IP address. **Broadcast Address:** Selecting this option causes the produced data to be sent to the subnet broadcast address. **Name:** an ASCII string of up to 31 characters. This name must be a name that the Ethernet Interface will resolve into the needed IP address using available name resolution protocols. **Group ID:** the group's ID number (1–32) selected from the drop-down list for this field.
Send Type	Describes under what conditions data will be produced. Currently fixed at "always". In the PLC production of EGD is controlled by the I/O state: when enabled, EGD production is enabled, and when disabled, EGD production is disabled.

Producer Period A value with the possible range of 10–3,600,000 (10 milliseconds to 1 hour) representing the scheduled repetition period at which the data is to be produced on the network. In the PLC, the Ethernet Interface will produce the data at this interval independent of when the CPU updates the data sample. The default is 200 milliseconds. For the CPU374, the range is 2 milliseconds to 1 hour. The CPU374 also allows a zero producer period which indicates producing "as fast as possible".

Round this value to the nearest 10 milliseconds (2 milliseconds for the CPU374) before you enter it. The producer period has a resolution of 10 milliseconds (2 milliseconds for the CPU374). If you enter a value such as 12 milliseconds, the actual producer period will be rounded up to 20 milliseconds (not rounded for the CPU374).

Reply Rate Currently not used.

Status Word A variable that identifies the memory location where the status value for the produced exchange will be placed. Valid memory types are listed later in this chapter.

Exchange Variables A list of data elements making up the snapshot of internal memory that will be produced on the network. Each exchange has one variable list, which will be transmitted to the consuming device as a contiguous set of bytes. A maximum of 100 variables can be defined in one exchange definition and the size of all combined elements cannot exceed 1400 bytes. The data types BOOL and BOOL_STATE are not allowed for exchange variables.

Consumed Data Exchange Definition

The information to be received by the consumer and the exchange details are defined in the Consumed Exchanges tab of the Ethernet Global Data dialog box.

The consumed data exchange definition contains the following information:

Field	Details
Local Producer ID	A value in the form of a dotted-decimal IP address that uniquely identifies the Ethernet Global Data device across the network. For Series 90-70 PLCs, the default is the same as the IP address of the Ethernet Interface closest to the CPU in the main rack. For Series 90-30 PLCs, the default is the same as the IP address of the CPU364 or CPU374 Embedded Ethernet Interface. The default value can be changed.
Adapter Name	Identifies the adapter name of the Ethernet Interface within the consuming device. For the CPU374, this field is not editable and displays the rack and slot of the CPU.
Exchange ID	A numerical value assigned by the user to identify a specific data exchange to be received by the consuming device. It must match the Exchange ID specified in the produced exchange.
Remote Producer ID	Identifies the Producer ID of the PLC producing the exchange.
Group ID	Used only if the same data is consumed by more than one consuming device (the same group ID must also be assigned in the produced data exchange definition).
Consumer Period	(For the CPU374, this field is not editable as there is no consumer period.) A value with a possible range of 10–3,600,000 milliseconds (10 milliseconds to 1 hour) that specifies how often the consuming device should scan the local Ethernet Interface for new data and/or status updates. The actual scan time may be affected by the logic sweep time. Scanning the data will not interrupt normal logic sweep execution. For peak efficiency, the consumer period should be set to the same value as the Producer period in the corresponding produced data exchange definition. The default is 200 milliseconds. Round this value to the nearest 10 milliseconds before you enter it. The consumer period has a resolution of 10 milliseconds. If you enter a value such as 12 milliseconds, the actual consumer period will be rounded up to 20 milliseconds.
Update Timeout	A value with a possible range of 0, 10–3,600,000 milliseconds that specifies how often the Ethernet Interface should declare the occurrence of a refresh error. The error signals when a first or subsequent packet of data does not arrive within the specified time. It is recommended that the value be at least double the producer's producer period value and 20 milliseconds greater than the consumer period to allow for transient network delays. The default is 0 indicating no timeout is used. Round this value to the nearest 10 milliseconds before you enter it. The update timeout has a resolution of 10 milliseconds. If you enter a value such as 22 milliseconds, the actual update timeout will be rounded up to 30 milliseconds.

Status Word A variable that identifies the memory location where the status value for the consumed exchange will be placed. Valid memory types are listed later in this chapter.

Time Stamp A variable that identifies the memory location where the timestamp of the last data packet will be placed. The timestamp is not an actual date, it is an 8-byte value representing the time elapsed since midnight, January 1, 1970. The first four bytes contain a signed integer representing seconds and the next four bytes contain a signed integer representing nanoseconds. This value represents the time in the producer when the data sample originated. It can be examined to determine if a new packet received from the network has a new data sample or if it is the same data received previously.

The timestamp information produced by the PLC currently has a resolution of 100 microseconds if no network synchronization is used. If SNTP is used to perform network time synchronization, the timestamp information has a resolution of 1 millisecond and has ±10 millisecond accuracy between PLCs on the same LAN.

SNTP is enabled in Module Configuration for the Ethernet Interface. Once SNTP time synchronization is configured, the Ethernet Interface will synchronize itself to an external SNTP time server. Only EGD exchanges produced through an SNTP-synchronized Ethernet Interface will carry network-synchronized timestamps. EGD exchanges produced through other Ethernet Interfaces in the same PLC that are not configured for network synchronization will use the PLC's timestamp information.

Exchange Variables A list of data elements making up the snapshot of internal memory that will be consumed from the network. Each exchange has its own variable list, which will be received from the producing device as a contiguous set of bytes. The elements in the list are defined as variables. A maximum of 100 variables can be defined in one exchange definition. The data types BOOL and BOOL_STATE are not allowed for exchange variables and the total size of all variables cannot exceed 1400 bytes. For consumed exchanges, %S memory types and override references are not allowed. Valid memory types are listed in this chapter.

Configuring Ethernet Global Data

Once you have collected all the essential information for your EGD system, connect to each PLC and configure the exchanges.

For each PLC:

1. With the PLC programming software, open the Equipment folder for the PLC.
2. Open Hardware Configuration.
3. Choose Module Configuration and assign an adapter name to each Ethernet Interface in the PLC that will be producing or consuming Ethernet Global Data. If you are using Simple Network Time Protocol (SNTP), set the Network Time Sync parameter to SNTP.
4. If you are using Aliases to identify the consumer, assign them now. Choose Rack Operations and select Name Resolution and Routing Table (or click the right mouse button and choose Name Resolution and Routing from the pop-up menu). Click the Alias tab and assign Aliases.
5. Choose Rack Operations and select Ethernet Global Data (or click the right mouse button and choose Ethernet Global Data from the pop-up menu).
6. In the Ethernet Global Data dialog box, configure the Producer ID (in the Local Producer ID field) and the produced and consumed exchanges for the PLC. Use the information you have collected to fill in the parameters.
7. Connect and store the new configuration to the PLC.
8. Put the PLC in Run mode with I/O enabled.

Note

If you have configured a name server for an Ethernet Interface and the server is not online, you may get periodic PLC Fault Table entries after storing the EGD configuration to the PLC.

Example 1: EGD Configuration Using IP Addresses to Identify Consumers

There are two PLCs in this simple EGD system. PLC1 is the producer and PLC2 is the consumer of a single Ethernet Global Data exchange. The consumer in this example is identified by IP address. Network-synchronized time stamping is not used. The identification of the PLCs and the details of the exchange are shown in the tables below.

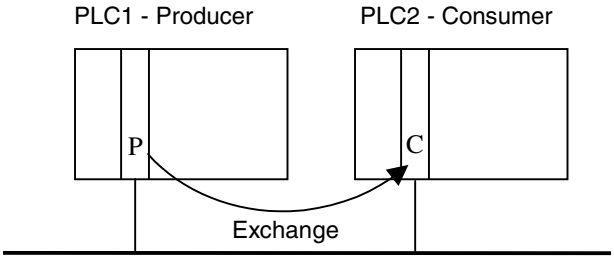

Producer/Consumer Information for Entire EGD System – EXAMPLE 1

Your Name for the PLC (Equipment Folder Name)	P	C	Local Producer ID	Ethernet Interface(s)		
				Network Adapter Name	CCU Device Name	IP Address*
PLC1	X		0.0.0.1	PLC1	PLC1	10.0.0.23
PLC2		X	0.0.0.2	PLC2	PLC2	10.0.0.41

P=Producer C=Consumer * Use your own IP addresses here.

Produced Exchange Information – EXAMPLE 1

Local Producer ID	Exchange ID	Local Adapter Name	Consumer Type	Consumer Address	Send Type	Producer Period	Reply Rate	Status Word
0.0.0.1	1	PLC1	IP Address	10.0.0.41	Always	1000	N/A	Stat1

Variable List for Produced Exchange – EXAMPLE 1

Local Producer ID	Exchange ID	Var #	Name	Address	Length	Type	Description
0.0.0.1	1	1	Conveyor1	%R00100	5	WORD	Conveyor 1 in PLC1

Consumed Exchange Information – EXAMPLE 1

Local Producer ID	Exchange ID	Local Adapter Name	Remote Producer ID	Group ID	Consumer Period	Update Timeout	Status Word	Time Stamp
0.0.0.2	1	PLC2	0.0.0.1	0	1000	2000	Stat1	n/a

Variable List for Consumed Exchange – EXAMPLE 1

Local Producer ID	Remote Producer ID	Exchange ID	Var #	Name	Address	Length	Type	Description
0.0.0.2	0.0.0.1	1	1	Conveyor1	%R00200	5	WORD	Conveyor 1 from PLC1

Note

These tables contain definitions of ALL the exchanges in the entire EGD system. The shaded columns identify the PLC in which a given exchange is to be configured and additionally, for the variable list tables, the exchange the variable is associated with.

Example 2: EGD Configuration Using a Group ID to Identify Consumers

There are three PLCs in this EGD system using the Group ID feature. PLC1 is the producer and PLC2 and PLC3 are the consumers of a single Ethernet Global Data exchange. The consumers in this example are identified by Group ID. Network-synchronized time stamping is not used. The identification of the PLCs and the details of the exchange are shown in the tables below.

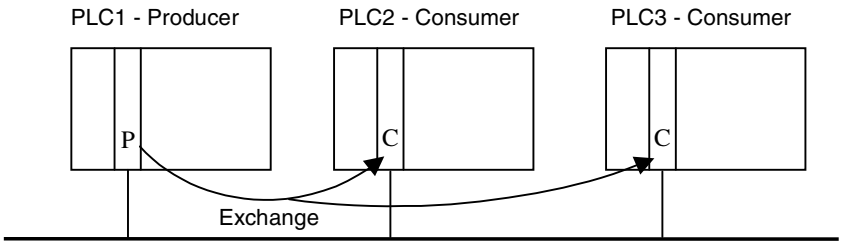

Producer/Consumer Information for Entire EGD System – EXAMPLE 2

Your Name for the PLC (Equipment Folder Name)	P	C	Local Producer ID	Ethernet Interface(s)		
				Network Adapter Name	CCU Device Name	IP Address*
PLC1	X		0.0.0.1	PLC1	PLC1	10.0.0.23
PLC2		X	0.0.0.2	PLC2	PLC2	10.0.0.41
PLC3		X	0.0.0.3	PLC3	PLC3	10.0.0.50

P=Producer C=Consumer * Use your own IP addresses here.

Produced Exchange Information – EXAMPLE 2

Local Producer ID	Exchange ID	Local Adapter Name	Consumer Type	Consumer Address	Send Type	Producer Period	Reply Rate	Status Word
0.0.0.1	1	PLC1	Group ID	1	Always	1000	0	Stat1

Variable List for Produced Exchange – EXAMPLE 2

Local Producer ID	Exchange ID	Var#	Name	Address	Length	Type	Description
0.0.0.1	1	1	Conveyor1	%R00100	5	WORD	Conveyor1 in PLC1

Consumed Exchanges Information – EXAMPLE 2

Local Producer ID	Exchange ID	Local Adapter Name	Remote Producer ID	Group ID	Consumer Period	Update Timeout	Status Word	Time Stamp
0.0.0.2	1	PLC2	0.0.0.1	1	1000	2000	Stat1	n/a
0.0.0.3	1	PLC3	0.0.0.1	1	1000	2000	Stat1	n/a

Variable List for Consumed Exchanges – EXAMPLE 2

Local Producer ID	Remote Producer ID	Exchange ID	Var#	Name	Address	Length	Type	Description
0.0.0.2	0.0.0.1	1	1	Conveyor1	%R00200	5	WORD	Conveyor1 from PLC1
0.0.0.3	0.0.0.1	1	1	Conveyor1	%R00300	5	WORD	Conveyor1 from PLC1

Note

These tables contain definitions of ALL the exchanges in the entire EGD system. The shaded columns identify the PLC in which a given exchange is to be configured and additionally, for the variable list tables, the exchange the variable is associated with.

Example 3: EGD Configuration Using a Symbolic Name to Identify Consumers

There are three PLCs in this more complex EGD system using three Ethernet Global Data exchanges. PLC1 contains two Ethernet Interfaces (designated A and B), one of which is both a producer and a consumer. PLC2 is a consumer only. And PLC3 is both a producer and a consumer. The Adapter Names are used as the symbolic names to identify the consumer PLCs. No aliases have been configured, so DDP name resolution will be used. (See "Name Resolution" in the chapter: "Network Administration Support", for more information.) Network-synchronized time stamping is not used. The identification of the PLCs and the details of the exchange are shown in the tables below.

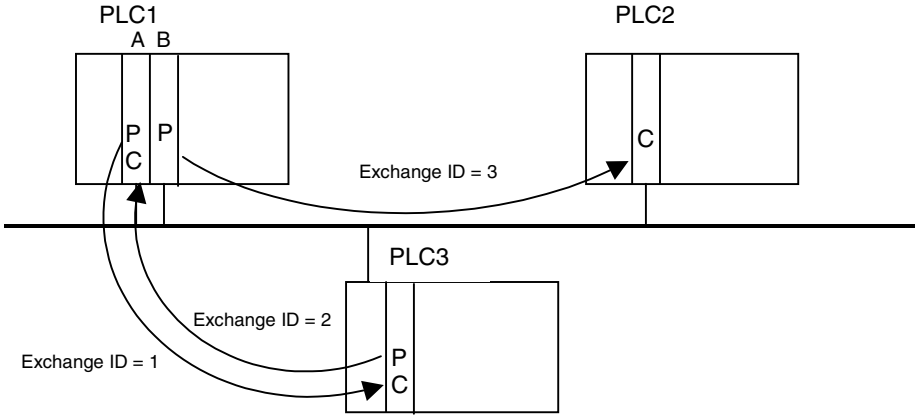

Producer/Consumer Information for Entire EGD System – EXAMPLE 3

Your Name for the PLC (Equipment Folder Name)	P	C	Local Producer ID	Ethernet Interface(s)		
				Network Adapter Name	CCU Device Name	IP Address*
PLC1	X	X	0.0.0.1	PLC1_A	PLC1_A	10.0.0.23
PLC1	X		0.0.0.1	PLC1_B	PLC1_B	10.0.0.34
PLC2		X	0.0.0.2	PLC2	PLC2	10.0.0.41
PLC3	X	X	0.0.0.3	PLC3	PLC3	10.0.0.50

P=Producer C=Consumer * Use your own IP addresses here.

Produced Exchanges Information – EXAMPLE 3

Local Producer ID	Exchange ID	Local Adapter Name	Consumer Type	Consumer Address	Send Type	Producer Period	Reply Rate	Status Word
0.0.0.1	1	PLC1_A	Name	PLC3	Always	1000	0	Stat1
0.0.0.1	3	PLC1_B	Name	PLC2	Always	1000	0	Stat3
0.0.0.3	2	PLC3	Name	PLC1_A	Always	1000	0	Stat2

Variable List for Produced Exchanges – EXAMPLE 3

Local Producer ID	Exchange ID	Var #	Name	Address	Length	Type	Description
0.0.0.1	1	1	Conveyor1	%R00100	5	WORD	Conveyor1 in PLC1
0.0.0.1	3	1	Conveyor2	%R00105	5	WORD	Conveyor2 in PLC1
0.0.0.3	2	1	Vat1	%R00300	10	WORD	Vat1 in PLC3
0.0.0.3	2	2	Vat2	%R00310	10	WORD	Vat2 in PLC3

Consumed Exchanges Information – EXAMPLE 3

Local Producer ID	Exchange ID	Local Adapter Name	Remote Producer ID	Group ID	Consumer Period	Update Timeout	Status Word	Time Stamp
0.0.0.1	2	PLC1_A	0.0.0.3	0	1000	2000	Stat2	n/a
0.0.0.2	3	PLC2	0.0.0.1	0	1000	2000	Stat3	n/a
0.0.0.3	1	PLC3	0.0.0.1	0	1000	2000	Stat1	n/a

Variable List for Consumed Exchanges – EXAMPLE 3

Local Producer ID	Remote Producer ID	Exchange ID	Var#	Name	Address	Length	Type	Description
0.0.0.1	0.0.0.3	2	1	Vat1	%R00150	10	WORD	Vat1 from PLC3
0.0.0.1	0.0.0.3	2	2	Vat2	%R00160	10	WORD	Vat2 from PLC3
0.0.0.2	0.0.0.1	3	1	Conveyor2	%R00250	5	WORD	Conveyor2 from PLC1
0.0.0.3	0.0.0.1	1	1	Conveyor1	%R00350	5	WORD	Conveyor1 from PLC1

Note

These tables contain definitions of ALL the exchanges in the entire EGD system. The shaded columns identify the PLC in which a given exchange is to be configured and additionally, for the variable list tables, the exchange the variable is associated with.

Valid PLC Memory Types Used with EGD

Type	Value (Decimal)	Description	P-Producer C-Consumer
%R	8	Register memory in word mode	P/C
%AI	10	Analog input memory in word mode	P/C
%AQ	12	Analog output memory in word mode	P/C
%I	16	Discrete input memory in byte mode	P/C
%Q	18	Discrete output memory in byte mode	P/C
%T	20	Discrete temporary memory in byte mode	P/C
%M	22	Discrete momentary memory in byte mode	P/C
%SA	24	Discrete system memory group A in byte mode	P/C
%SB	26	Discrete system memory group B in byte mode	P/C
%SC	28	Discrete system memory group C in byte mode	P/C
%S	30	Discrete system memory in byte mode	P
%G	56	Discrete global data table in byte mode	P/C
%I override	114	Discrete override input memory in byte mode	P
%Q override	116	Discrete override output memory in byte mode	P
%T override	118	Discrete override temporary memory in byte mode	P
%M override	120	Discrete override momentary memory in byte mode	P
%SA override	122	Discrete override system memory group A in byte mode	P
%SB override	124	Discrete override system memory group B in byte mode	P
%SC override	126	Discrete override system memory group C in byte mode	P
%S override	128	Discrete override system memory in byte mode	P
%G override	130	Discrete override global data table in byte mode	P
Ignore bytes	255	Can be used to ignore produced data in a consumer.	C

Adapter Names, Aliases, and Groups

Setting Adapter Names and Aliases in the Windows-Based Programming Software

This section does not apply to the Series 90-30 CPU374, because it uses the rack and slot as its adapter name and does not support aliases for remote network adapters.

Configuring the Ethernet Interface Adapter Name

If an Ethernet Interface will be used in Ethernet Global Data exchanges, you *must* specify an adapter name for the Interface. When you define an Ethernet Global Data exchange, you will use the adapter name to specify which Ethernet Interface will produce the exchange.

Refer to the installation chapter for details on how to configure the adapter name for your particular Ethernet Interface.

Setting Aliases for Remote Network Adapters

If a remote network adapter, such as an Ethernet Interface or a device running the Host Communications Drivers, will be used in Ethernet Global Data exchanges *and* you want to use local name table name resolution, you must locally associate an alias with the remote network adapter's IP address. When you define an Ethernet Global Data exchange, you will use this alias to specify which network adapter will consume the exchange.

To assign an alias for a remote network adapter:

1. From Hardware Configuration go to the Edit menu, choose Rack Operations, and select Name Resolution (or click the right mouse button and choose Name Resolution from the pop-up menu).
2. In the Name Resolution Table dialog box, click the Aliases tab.
3. Click the Add Entry button.
4. In the Alias field, type the name you want to use to refer to the remote network adapter.
5. Click the IP Address field and type the IP address of the remote network adapter, then click the OK button.

Group Usage

The group concept in Ethernet Global Data exchanges allows many EGD devices to simultaneously consume the same data produced by one producing EGD device. This capability is valuable for efficient bandwidth utilization in systems where data may be shared among multiple devices. This capability is made available by a technique called Multicasting. For more information on Multicasting, see the topic “Multicast IP Addresses” in the chapter: “Network Administration Support”.

Ethernet Global Data supports the use of 32 separate groups, each identified by a Group ID (1-32). The EGD Group ID corresponds to a Multicast (Class D) IP address reserved by the Internet authorities (IP addresses 224.0.0.0 through 239.255.255.255). The default Multicast IP addresses used by EGD are:

Group ID	IP Address
1	224.0.7.1
2	224.0.7.2
.	.
.	.
.	.
32	224.0.7.32

These addresses are configurable within the Ethernet Interface using Station Manager, but are considered Advanced User Parameters and should only be changed if necessary to avoid a network conflict.

To enable group usage, configure the consumer exchanges to use the same Group ID (1-32) as the producer of the exchange.

In the PLC programming software:

1. In the producer definition, choose Group ID as the Destination Type. In the Consumer Address field, select a value between 1 and 32.

In the consumer definition(s), select the same value for Group ID that you entered in the producer definition’s Consumer Address field. The value 0 implies no group usage.

Exchange Status Word

The Exchange Status word allows an Ethernet Global Data user to obtain the operating status of a given exchange definition. The PLC will write status codes into the Exchange Status word.

The Exchange Status word is changed upon exchange configuration* and when a producer/consumer period expires, and the value will be set for the entire period. Therefore, it is possible for the Exchange Status word to always be set to 1, indicating that at the time the period expires, there was no error condition. The user program can monitor for error conditions reported in the Exchange Status word by setting it to 0 once a non-zero value is written to it.

The first update of the Exchange Status word occurs the first time the producer/consumer period timer expires. (In the CPU374, it occurs on the first data transfer.)

Note

The user-program should also monitor the “LAN Interface OK” Status bit for each of the Ethernet Interfaces performing EGD. The Exchange Status word is invalid if the bit is 0. Refer to the topic, “Status Bits”, in the chapter: “Programming Communications Requests”, for more information.

Exchange Status Word Error Codes

The following table shows the error codes that can be written to the Exchange Status word.

Value (Dec.)	Produced / Consumed	Error	Description
0	P/C	**No new status event has occurred.**	Produced: Initial value until the first producer period refresh occurs. Consumed: The data has not been refreshed since the previous consumption scan and the consumer timeout has not expired.
1	P	**No error currently exists.**	The exchange is producing data.
1	C	**No error, data consumed.**	The data has been refreshed on schedule since the previous consumption.
3	C	**SNTP error.** .	The Ethernet Interface in the producer is configured for network time synchronization, but is not synchronized to an SNTP server. The data has been refreshed on schedule.
4	P/C	**Specification error.**	Produced: During exchange configuration*, an invalid configuration parameter was received by the Ethernet Interface or an error occurred in communication with the PLC CPU. Consumed: Same as Produced, or the size of a received packet for this exchange definition did not match the expected size.
6	C	**Refresh timeout without data.**	The exchange's timeout period is configured to a non-zero value and the data has not been refreshed within the timeout period.
7	C	**Data after refresh timeout.**	The data has been refreshed since the previous consumption, but was not refreshed within the timeout period.
10	P/C	**IP Layer not currently initialized.**	This status can be set during exchange configuration* if the Ethernet Interface detects that it cannot currently access a network (cable not connected, hardware failure, etc.) This is a temporary status that may change if successful network access becomes possible.
12	P/C	**Lack of resource error.**	Local resources are not available to establish the exchange. This error can only occur during exchange configuration*. The PLC Fault Table should be examined to obtain more detail on the specific error.
16	P	**Name Resolution in progress.**	A local produced exchange definition has specified a name for the consumer address and the local Ethernet Interface is awaiting a response from a remote name server following exchange configuration*. This is a temporary status that will change when the name resolution completes. If successful, the status will become 0 (No New Data); if unsuccessful, the status will become 4 (Specification Error).
18	P/C	**Loss of Ethernet Interface error.**	This error can occur if the CPU no longer recognizes the Ethernet Interface within the PLC rack. A loss of module PLC Fault Table entry will also be present. The error can also occur if the module in the given slot of the PLC rack does not match the module specified in the configuration (configuration mismatch).
22	P/C	**Ethernet Interface does not support EGD.**	The revision level of the Ethernet Interface does not support global data.
26	P/C	**No Response from Ethernet Interface.**	Did not respond to establish exchange request. This fault can only occur during exchange configuration*.
28	P/C	**Failed to create an exchange.**	An error occurred (other than a resource error, no response or loss of Ethernet Interface) during exchange configuration*. A PLC Fault Table entry is provided for additional information about the fault.

* Exchange configuration occurs when either 1) Hardware Configuration containing EGD is stored to the PLC, 2) a PLC containing EGD configuration powers up, or 3) an Ethernet Interface configured for EGD is restarted.

Simple Network Time Protocol (SNTP)

SNTP is a method of synchronizing the internal clocks in a network's Ethernet Interfaces to an external source. In an SNTP system, a computer on the network (called an SNTP server), sends out a periodic timing message to all of the SNTP-capable Ethernet Interfaces on the network, which keep their internal clocks synchronized with this common SNTP timing message.

Timestamping EGD Exchanges

Each EGD exchange contains a timestamp that pinpoints when the associated data was transferred from the producing PLC's CPU to its Ethernet Interface for transmission over the network. The timestamp value is based on a built-in clock in the Ethernet Interface. It sends this value to the PLC CPU, which uses it to timestamp its data exchanges. Its time clock is synchronized to one of the following two sources:

- **PLC's Time Clock:** If the Network Time Sync parameter of the Ethernet Interface is set to None or DISABLED, the Ethernet Interface's built-in time clock is synchronized once, at power-up or restart, to the clock in the local PLC CPU. The disadvantage of this source is that the time clocks in the various PLCs on the network are not synchronized, so timestamps produced by different PLCs cannot be compared accurately.
- **SNTP Server's Time Clock:** If the Ethernet Interface's Network Time Sync parameter is set to SNTP or ENABLED, the Ethernet Interface's built-in clock is periodically synchronized to the clock on the SNTP server. This method has the advantage that all Ethernet Interfaces configured to use SNTP will have updated, synchronized timestamps, because they will all be synchronized to the SNTP server's clock. Therefore, accurate timing comparisons between exchanged data can be made. For example, if alarm data were sent over the network from several PLCs, it might be advantageous for troubleshooting purposes to know the order in which the alarms were generated. Using SNTP, the data's synchronized timestamps could help you determine this.

Notes

With SNTP operation, the time value passed from the Ethernet Interface to the PLC CPU is used in the PLC only for timestamping EGD exchanges. It does not affect the time of the CPU's internal time clock.

SNTP server dates before January 1, 1989 are not supported by the Ethernet Interface.

Configuring an Ethernet Interface for SNTP

SNTP operation must be configured for each Ethernet Interface individually. For more information for your particular Ethernet Interface, refer to the installation chapter.

Normal SNTP Operation

The Ethernet Interface will synchronize to a remote SNTP time server after receiving two broadcast clock values within a 150-second period. The Station Manager can be used to view server status information.

Multiple SNTP Servers

To guard against loss of SNTP timing messages, multiple SNTP time servers can be tracked on a network. An Ethernet Interface can maintain timing information from up to four total SNTP time servers at a time. Each server assigns a stratum number that determines its priority. The message from the server with the lowest stratum number is used by the Ethernet Interface until communication with that server is lost. Then the server with the next lowest stratum number becomes the server of choice and the Ethernet Interface synchronizes to it if it receives two of its timing messages within a 150-second period. A server is considered "lost" if more than 150 seconds elapse between timing messages.

The Station Manager command, *CHSNTP*, can be used to override the Ethernet Interface's automatic server selection strategy and identify specific server(s) to be used. For more information on using the Station Manager, refer to GFK-1186, *TCP/IP Ethernet Communications for the Series 90 PLC Station Manager Manual*.

Loss or Absence of SNTP Timing Signals

If an Ethernet Interface is configured for SNTP, but does not receive two timing messages from an SNTP network time server within a 150-second period, the following will happen:

- A fault entry will be placed in the PLC Fault Table.
- A fault entry will be placed in the Ethernet Interface's exception log. This log can be read by using the GE Fanuc Station Manager. Details can be found in GFK-1186, *TCP/IP Ethernet Communications for the Series 90 PLC Station Manager Manual*.
- The Status word within a consumed exchange will indicate new data with a value of 3, instead of the normal 1 value, indicating that SNTP is selected, but the Ethernet Interface is not synchronized to an SNTP server. This Status word value can be obtained from the PLC register configured for the particular exchange.

Note

The SNTP error condition is considered the least important of all possible error codes. Therefore, if another error condition exists, its status code will appear in the Status word instead of the SNTP error code.

Upon loss or absence of synchronization, the Ethernet Interface's built-in clock will operate as follows:

- If the Ethernet Interface, after its last power-up/restart cycle, has never received an SNTP server's timing message, it will continue to use the PLC CPU's local clock value that it received at power-up/restart for its time base.
- If the Ethernet Interface has, at some point, been synchronized to an SNTP server but lost its signal, it will use the most recently received SNTP time message as its time base.

The Ethernet Interface will continue supplying time values to the PLC CPU for timestamping, while it "listens" for SNTP timing messages from the network. If SNTP messages are received later, the Ethernet Interface will then synchronize to them.

Chapter 6 Network Administration Support

This chapter discusses information related to how host computers are identified on the network and how data is routed to a host computer. The main topics covered are:

- IP Addressing
- Gateways
- Subnets and Multiple Gateways
- Configuring Multiple Gateways
- Network Address Naming Architecture
- MAC Addressing

IP Addressing

Each TCP/IP *node* on a network must have a unique *IP address*. The *TCP/IP Ethernet Interface* is such a node, as is a PC running TCP/IP. There may be other nodes on the network that are not involved with communications to the PLCs, but no matter what their function, each TCP/IP node must have its own *IP address*. It is the *IP address* that identifies each node on the IP network (or system of connected networks). The term "host" is often used to identify a node on a network.

IP Address Format for Network Classes A, B, C

The *IP address* is 32 bits long and has a *netid* part and a *hostid* part. Each network is a Class A, Class B or Class C network. The class of a network determines how an *IP address* is formatted and is based on the number of bits in the *netid* part of the IP address.

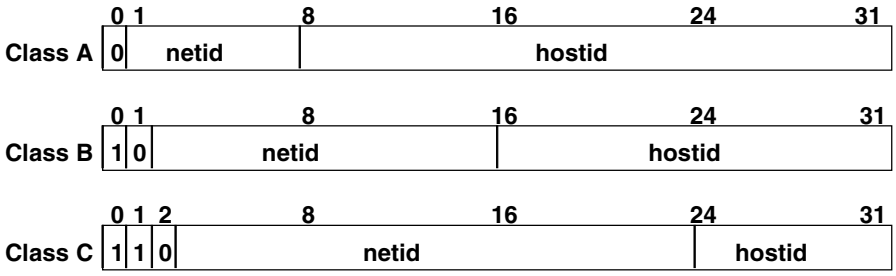

In general, the *netid* part is assigned by the Internet authorities and the *hostid* part is assigned by your local network administrator. The class of network determines the number of hosts that can be supported. A Class A network can support 2^{24}-2 (16,777,214) hosts, Class B, 2^{16}-2 (65,534) hosts, and Class C, 2^{8}-2 (254) hosts. The minus 2 refers to host numbers reserved for the network itself and the local broadcast.

Each node on the same physical network must have an *IP address* of the same class and must have the same netid. Each node on the same physical network must have a different *hostid* thus giving it a unique *IP address.*

IP addresses are written in "dotted-decimal" format as four decimal integers (0-255) separated by periods where each integer gives the value of one byte of the IP address. For example, the 32-bit IP address

00001010 00000000 00000000 00000001

is written as

10.0.0.1

One can determine the class of an IP address by examining the first integer in its dotted-decimal IP address and comparing with the range of values in the following table.

Range of first integer	Class
0 - 127	A
128 - 191	B
192 - 223	C
224-239	D (Reserved for Multicast Use)
240 - 255	E (Reserved for Experimental Use)

IP Addresses Reserved for Private Networks

RFC 1918 reserves IP addresses in the following ranges to be used for private networks.

10.0.0.0 – 10.255.255.255	(Class A)
172.16.0.0 – 172.31.255.255	(Class B)
192.168.0.0 – 192.168.255.255	(Class C)

Multicast IP Addresses

Multicast IP Addresses are used in multicasting, a technique that allows delivery of a single packet of data to multiple nodes on the network. Any node that joins a Multicast group will respond to the Multicast IP address assigned to that group. Subsequently, any data sent to that Multicast IP address may be received by all nodes which are members of that Multicast group. Multicast (Class D) IP addresses (224.0.0.0 through 239.255.255.255) are reserved by the Internet authorities for multicasting.

Multicasting is a feature of Ethernet Global Data. For more information on the use of multicasting in Ethernet Global Data, see the topic “Group Usage” in the chapter: “Ethernet Global Data”.

Gateways

Gateways (also known as routers) connect individual physical networks into a system of networks. When a node needs to communicate with a node on another physical network, a gateway transfers the data between the two networks.

Networks Connected by a Gateway

The following example shows Gateway G connecting Network 1 with Network 2.

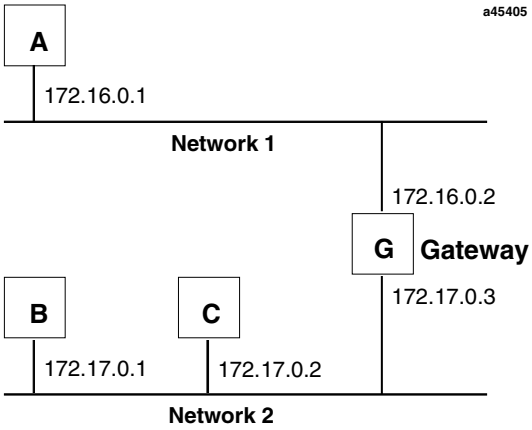

When host B with IP address 172.17.0.1 communicates with host C, it knows from C's IP address that C is on the same network. In an Ethernet environment, B can then resolve C's IP address to a MAC address (via ARP) and communicate with C directly.

When host B communicates with host A, it knows from A's IP address that A is on another network (the *netids* are different). In order to send data to A, B must have the IP address of the gateway connecting the two networks. In this example, the gateway's IP address on Network 2 is 172.17.0.3. This address would be configured in the Ethernet Interface's module configuration for PLC B as its default gateway address.

Note that the gateway has two IP addresses (172.16.0.2 and 172.17.0.3). The first must be used by hosts on Network 1 and the second must be used by hosts on Network 2. To be usable, a host's gateway must be addressed using an IP address with a *netid* matching its own.

Subnets and Multiple Gateways

For a site requiring a large network (such as a Class A network) the number of entries in the routing tables of a site's internal gateways could number in the millions if no internal network structure is superimposed on the address definition. The solution to this problem is subnetting.

Subnets allow a site's network administrators to divide a large network into several smaller networks while still presenting the overall network as one single entity to the outside world. Each of the site's interior gateways need only maintain the subnet numbers of other interior gateways instead of every single host on the entire network.

Subnet Addressing and Subnet Masks

Subnet addressing is an extension of the IP address scheme that allows a site to use a single netid for multiple physical networks. Routing outside the site continues as usual by dividing the IP address into a netid and a hostid via the class.

The standard format for the netid bits and hostid bits for an IP address in a Class B network is shown below.

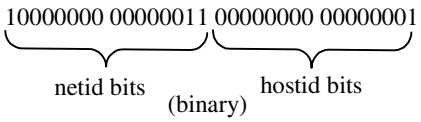

Inside a site the *subnet mask* is used to re-divide the IP address into a custom netid portion and hostid portion. Consider adding another physical network to Network 2 (a Class B network) in the previous example (see Figure 7-2). The result is shown in Figure 7-3. Selecting the subnet mask shown below would add two additional *netid* bits allowing for four physical networks addressed as 0, 64, 128, and 192. The added subnet bits are normally taken from the *hostid bits* adjacent to the *netid* and the subnet mask identifies these bits.

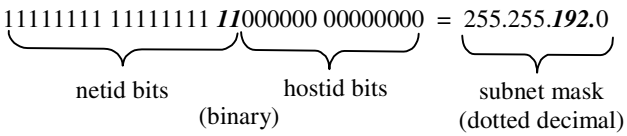

The bits in the subnet mask correspond one to one with the Internet address. The bits in the mask that are 1 treat the corresponding bits in the IP address as part of the *netid* bits. The bits in the mask that are 0 treat the corresponding bits as part of the *hostid* bits.

In effect, two bits of the Class B *hostid* have been used to extend the *netid,* creating an *extended netid*, or *subnetid*. Each unique combination of bits in the part of the *hostid* where subnet mask bits are 1 specifies a different physical network.

Example: Network Divided into Two Subnets

The new network configuration dividing Network 2 into Subnets 2.1 and 2.2 is shown below.

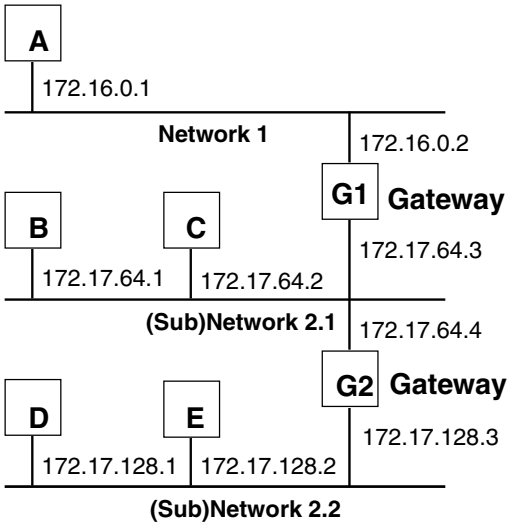

Here, a second network with Hosts D and E has been added. Gateway G2 connects Subnet 2.1 with Subnet 2.2. Hosts D and E will use Gateway G2 to communicate with hosts not on Network 2.2.

Hosts B and C will use Gateways G1 and G2 to communicate with hosts not on Network 2.1. When B is communicating with D, G2 (the configured Gateway for B) will route the data from B to D through Gateway G2.

Host A will use Gateway G1 to communicate with hosts not on Network 1.

Configuring Multiple Gateways

Multiple Gateways are supported on the Series 90-70 Ethernet Interface (Type 2) and the Series 90-30 CPU364 and CPU374 only.

An Ethernet Interface with the Multiple Gateways feature has the ability to route packets not only through a single default gateway, but also through additional gateways located on the local subnet.

The gateway that is configured in the Ethernet Interface's hardware configuration (using the PLC programming software) is defined as the default gateway. If supported in the Windows-based PLC programming software, additional gateways can also be configured to define alternate routes to remote subnets in the Routing tab of the *Name Resolution and Routing Table* Rack Operation. One routing table may be defined for a PLC system, which is made available to all the Ethernet Interfaces in that PLC.

Example: Configuring Multiple Gateways

This example is an extension of the example in Subnets and Multiple Gateways. Refer to that example to understand how subnets are created and the subnet mask (255.255.192.0) was determined. This example adds Subnet 2.3.

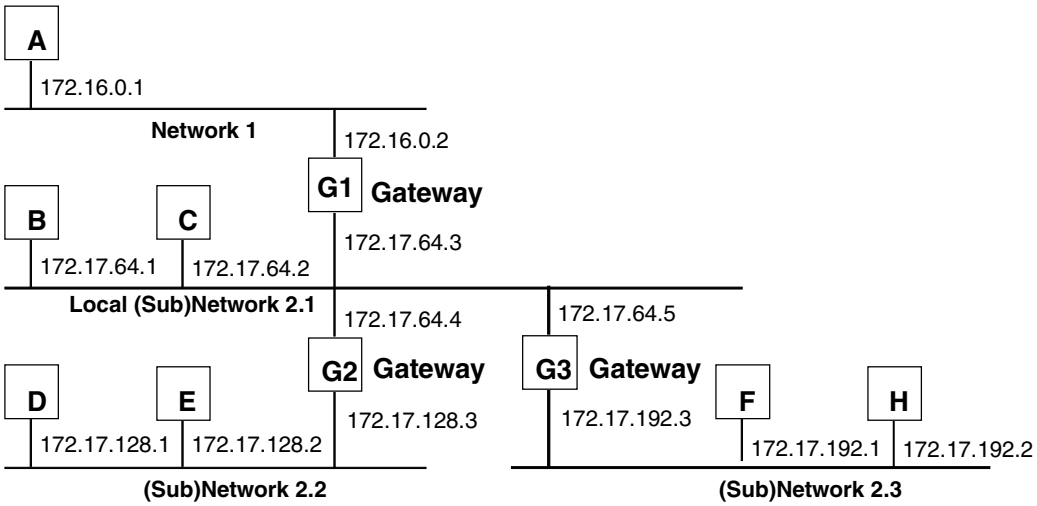

A PLC on Network1, Subnet 2.2, and Subnet 2.3 can talk to a PLC on one of the other networks without configuring multiple gateways because there is only one gateway on these networks. Gateway G1 would be configured as the default gateway for PLC A's Ethernet Interface; Gateway G2 for PLC D's and E's Ethernet Interface; and Gateway G3 for PLC F's and H's Ethernet Interface. The default gateway is configured in the Ethernet Interface's module configuration.

For Local Subnet 2.1, however, there are three gateways to choose from. The Ethernet Interfaces in PLC B and C must decide where to send data in order for it to arrive at its destination. If you have not configured these Ethernet Interfaces for multiple gateways and the data destination is not on Local Subnet 2.1, then the only gateway option for each Ethernet Interface is the one you configured as the default gateway in module configuration.

However, if you configure a routing table for PLCs B and C, their data may be forwarded to other gateways. If Gateway G1 has been configured as the default gateway, the routing table could have an entry for Subnet 2.2 via Gateway G2 and Subnet 2.3 via Gateway G3. If the data is not destined for either remote Subnet 2.2 or Subnet 2.3, then the data would be routed to Gateway G1, the default gateway.

To configure a PLC on Subnet 2.1 to be able to communicate with Network 1, Subnet 2.2, and Subnet 2.3 you need to know the following information.

Address of Gateway (G1)	172.17.64.3 (Default Gateway)
Subnet Mask for Subnet 2.1:	255.255.192.0
Address of Gateway (G2)	172.17.64.4
Subnet Mask for Subnet 2.2:	255.255.192.0
Subnet ID of Subnet 2.2*:	172.17.128.0
Address of Gateway (G3)	172.17.64.5
Subnet Mask for Subnet 2.3:	255.255.192.0
Subnet ID of Subnet 2.3*:	172.17.192.0

* The subnet ID is derived by ANDing the bits of the subnet mask and an IP address on the destination subnet.

Module Configuration for the Ethernet Interface in PLC B

The IP address, subnet mask, and default gateway IP address are entered in the Ethernet Interface's module configuration.

IP Address: 172.17.64.1

Subnet Mask: 255.255.192.0

Default Gateway IP Address: 172.17.64.3

PLC Routing Table to Configure Multiple Gateways for PLC B and PLC C

The following routing table entries are entered into the PLC's Routing tab of the *Name Resolution and Routing Tables* Rack Operation via the Windows-based PLC programming software (if supported).

#	Destination Subnet ID	Destination Subnet Mask	Next Hop IP Address (Gateway IP Address)	Cost
1	172.17.128.0	255.255.192.0	172.17.64.4	1
2	172.17.192.0	255.255.192.0	172.17.64.5	1

Network Address Naming Architecture

Naming architecture provides users the ability to refer to their Ethernet Interfaces in terms of a symbolic name rather than a numerical address. This name, commonly referred to as the *network address name*, can be constructed from the following character set:

a-z A-Z 0-9 ` ~ ! @ # $ % ^ & * ( ) _ + | - = \ { } [ ] : ” ; ’ < > ? . /

Note

The comma is not a supported character for network address names.

Note: the Series 90-30 CPU374 does not support network address naming.

Name Assignment

Name assignment associates a symbolic name to an IP address. There are three aspects of name assignment. The network may employ all or none of the name assignments described here. The next section, Name Resolution, will describe the mechanisms to acquire the address information (IP address) from an assigned symbolic name.

DDP Name Assignment

The first aspect of name assignment deals with the assignment of a network address name to an Ethernet Interface. The Ethernet Interface will register this name with DDP (a GE Fanuc naming protocol), and can be resolved using DDP Name Resolution, as described in a following section. There are two methods to assign a DDP network address name to an Ethernet Interface.

Default DDP Network Address Name

The first method is a default mechanism for the Ethernet Interface to assign itself a network address name. If the Ethernet Interface has no source for a network address name at startup, it will generate a name in the form:

“cmm321_xxxxxx” for the Series 90-30 Ethernet Interface
“cpu364_xxxxxx” for the Series 90-30 CPU364 Embedded Ethernet Interface
“cmm742_xxxxxx” for the Series 90-70 Ethernet Interface (Type 2)

where xxxxxx is the ASCII representation of the six rightmost hexadecimal digits of the MAC address used by this module.

This default mechanism will be used whenever no name is assigned to the Ethernet Interface in the module configuration using the PLC programming software (if supported), as described in the following section.

Assigned DDP Network Address Name

The second method is assignment of a network address name to the Ethernet Interface by the PLC programming software (if supported). The network address name is assigned in module configuration as the Adapter Name for the Ethernet Interface and stored to the PLC. This assigned DDP network address name will override the default DDP network address name. See Online Help in the PLC programmer software for instructions. (For the Series 90-30 Ethernet Interface, a network address name may only be assigned with the Station Manager command, *CHMYNAME.* This command is documented in GFK-1186, *TCP/IP Ethernet Communications for the Series 90 PLC Station Manager Manual*.)

Local Name Table Name Assignment

The second aspect involves building a name table that contains a mapping of symbolic names to associated IP addresses. A name assigned in this table is also known as an *alias*. A network address name assigned in the local name table can be resolved by Local Name Table Name Resolution, as described in a following section. This table may be created as follows:

- **For the Series 90-70 Ethernet Interface (Type 2) and Series 90-30 CPU364**, a name table can only be created using the Windows-based PLC programming software (if supported). For more information, refer to the chapter: "Ethernet Global Data".
- **For the Series 90-30 Ethernet Interface**, a name table can only be added, edited, and deleted with the Station Manager command, *CHNAMETBL.* This command is documented in GFK-1186, *TCP/IP Ethernet Communications for the Series 90 PLC Station Manager Manual.*

DNS Name Assignment

The third aspect involves connecting and configuring a DNS (Domain Name System) name server to the network. This DNS name server contains a database of name assignments and the corresponding address information (IP address) for each of these names. This DNS name server can be queried to acquire the IP address of a symbolic name known to that DNS name server. A network address name assigned in a DNS name server can be resolved using DNS Name Resolution, as described in a following section. Please ask your network administrator for more information about the availability of a DNS name server on your network.

Name Resolution

Name resolution involves resolving a symbolic name (network address name) to its necessary address information required for communication. Without name resolution functionality, a user is required to know this addressing information (that is, IP address) to establish communication with a remote device. Name resolution provides users a means to also use a symbolic name to reach the remote destination.

For the purposes of this description, the *client* is the device which needs to resolve a symbolic name. This symbolic name represents the IP address of the *server*. Possible *clients* include a user of the Host Communications Drivers and users of the client capability on the Ethernet Interface (for example, Channel API). Possible servers include the Ethernet Interface (for example, SRTP Server) and the Host Communications Drivers (for example, unsolicited messages).

Name resolution of a symbolic name into an IP address follows a strict precedence rule as follows: (The precedence order is configurable as an advanced parameter using the Station Manager.)

1. Local Name Table
2. DDP
3. DNS

Each of these is described in more detail in the following sections.

Local Name Table Name Resolution

Local name table name resolution involves a simple table lookup to see if a mapping of the symbolic name to its IP address information exists. Configuration of this table is described in the topic "Local Name Table Name Assignment" earlier in this chapter.

DDP Name Resolution

If local name table name resolution fails, DDP (a GE Fanuc naming protocol) is used to dynamically resolve the symbolic name. DDP name resolution involves the client node broadcasting a message on the network asking if any node recognizes the symbolic name. If a node does recognize the name, it responds and supplies the associated IP address. The client can then proceed with communication directly to that IP address. DDP uses broadcast traffic to perform name resolution. Certain routing configurations do not support routing of broadcast traffic, which implies that DDP name resolution will not work over such routers.

DNS Name Resolution

If both local name table and DDP name resolution fail, DNS is then attempted. This protocol is an industry standard for resolving symbolic names to IP addresses with the assistance of a remote DNS name server. The format of DNS usage is defined by RFCs 1034 and 1035. A separate DNS name server on the network is required for DNS operation.

To use DNS name resolution, the IP address of the remote DNS name server must be supplied to the Ethernet Interface in the PLC configuration. The symbolic name must be defined at the DNS name server.

Name Usage

Various areas of the PLC system support the use of this naming architecture. They can be broken into three categories: Channel API commands, Ethernet Global Data (EGD), and Station Manager commands.

Some Channel API commands allow the use of symbolic names in the remote node addressing fields of the COMMREQ Function Block.

In the configuration of an EGD exchange, the local Ethernet Interface that is responsible for producing/consuming the EGD is identified by its network address name (adapter name). Also, in the configuration of a produced exchange, the consumer address may be identified as a symbolic name. For more information, refer to the chapter: “Ethernet Global Data”.

The following Station Manager commands pertain to symbolic names: MYNAME, NAMETBL, *BROWSEDDP*, *PING*, *REM*, and *RESOLVE*. These commands are described in detail in GFK-1186, *TCP/IP Ethernet Communications for the Series 90 PLC Station Manager Manual*.

MAC Addresses

Note

It is highly recommended that you use the unique default MAC supplied within the Ethernet Interface. However, you may override that default with a MAC address of your own choosing with the Station Manager *CHPARM MACADDR* command (See GFK-1186, *TCP/IP Ethernet Communications for the Series 90 PLC Station Manager Manual*.)

The MAC address is a 48-bit binary number that identifies the station on the physical network. The MAC address is typically expressed as a 12-digit hexadecimal number. A typical MAC address is represented as follows:

```
Byte            1         2         3         4         5         6
                ___________ ___________ ___________ ___________ ___________ ___________
Hex           0    8    0    0    1    9    0    1    5    3    1    2
Binary      0000 1000 0000 0000 0001 1001 0000 0001 0101 0011 0001 0010
```

Another characteristic that is important, especially for multi-vendor networks, is the order of address-bit transmission on the physical medium. MAC addresses are transmitted in ascending byte order, with the least significant bit of each byte transmitted first.

The example above is shown including bit transmission order as follows:

```
  Byte            1         2         3         4         5         6
                  ___________ ___________ ___________ ___________ ___________ ___________
  Hex           0    8    0    0    1    9    0    1    5    3    1    2
  Binary      0000 1000 0000 0000 0001 1001 0000 0001 0101 0011 0001 0010
Bit Order     8765 4321      ...9                                  |
                           |                                 MSB of the MAC
  LSB of the MAC address-first bit transmitted             address-last bit
                                                           transmitted
```

If you assign your own MAC addresses, there are 2 bits of the 48-bit address that you must set according to the instructions that follow:

- Bit 1 in Byte 1 must always be a 0 to indicate an individual station rather than a Group address.
- Bit 2 in Byte 1 must be a 1 to indicate that the address is locally administered. (In the typical default MAC address shown above, bit 2 in Byte 1 is a 0 indicating that it is a globally administered address).
- All other bits can be set as desired as long as all stations on the network have unique addresses.

An example of a locally administered MAC address is shown below.

```
  Byte            1         2         3         4         5         6
                  ___________ ___________ ___________ ___________ ___________ ___________
  Hex           0    2    0    0    0    0    0    0    0    1    0    0
  Binary      0000 0010 0000 0000 0000 0000 0000 0000 0000 0001 0000 0000
Bit Order     8765 4321      ...9                                  |
                           |                                    MSB of the
   LSB of the MAC address-first bit transmitted                  MAC address-last
                                                                 bit transmitted
```

If you must change the Station MAC address, check with the person administering your network to make sure that you select an address that fits into your local administration scheme.

Chapter 7 Troubleshooting

This chapter is a guide to troubleshooting and problem isolation for the Series 90-30 Ethernet Interface, the Series 90-30 CPU364, the Series 90-30 CPU374, and the Series 90-70 Ethernet Interface (Type 2).

- Diagnostic Tools Available for Troubleshooting
- What to do if you Cannot Solve the Problem
- PLC Fault Table

Diagnostic Tools Available for Troubleshooting

There are several tools to assist you in diagnosing problems with the Series 90 Ethernet Interface and the network.

- Use the ***Ethernet Interface LEDs*** to troubleshoot a problem on power-up of the Ethernet Interface and for an immediate visual summary of the operational state of the Interface.
- Use the ***Series 90 PLC Fault Table*** to troubleshoot a problem once the Interface is running. It provides a record of exceptions logged by the PLC, the Ethernet Interface, and other Series 90 modules. The PLC Fault Table may be accessed through the PLC programming software. Look in the PLC Fault Table for a logged fault, then refer to the PLC Fault Table section in this chapter for instructions on what action to take.
- Use the ***Status Data*** to troubleshoot ladder programs containing COMMREQ functions that initiate communications. The status data consists primarily of the Status bits and the Communications Status words.
- For Ethernet Global Data operation, Exchange Status words can be used to troubleshoot exchange operations. Refer to the chapter: “Ethernet Global Data” for more information.
- Use the ***Station Manager software*** to troubleshoot a problem with the Ethernet Interface, with the network, with PLC backplane communication, or with your application. The LOG, TALLY, EXS, CHANNEL and STAT Station Manager commands are especially useful.

  - The LOG command provides a complete record of exceptions occurring with the network and Interface.
  - The TALLY command provides statistics about operation and performance of the network and Interface.
  - The EXS command provides information about COMMREQs.
  - The CHANNEL command displays detailed information about a specified SRTP communication channel.
  - The STAT command provides the current status on the operation of the Interface.

  Refer to GFK-1186, *TCP/IP Ethernet Communications for the Series 90 PLC Station Manager Manual*, for information on how to access and use the Station Manager software.

What to do if you Cannot Solve the Problem

If, after using the troubleshooting guide, you still cannot solve your problem, call GE Fanuc Automation - NA. Please have the following information available when you call.

- The Name and Catalog Number marked on the product.
- Description of symptoms of problem. *Depending on the problem, you may also be asked for the following information:*
  - The ladder logic application program and the PLC sweep time at the time the problem occurred.
  - A listing of the configuration parameters for the Ethernet Interface that failed.
  - A description of the network configuration. This should include the number of PLCs and host computers accessing the network, the type of network cable used (e.g. twisted pair, fiber optic, etc.), length of network cable, and the number and manufacturer of transceivers, hubs, and network switches used.

PLC Fault Table

The PLC Fault Table can be accessed in PLC programming software. If you are experiencing a problem with the Ethernet Interface, check the PLC Fault Table for a fault message, then refer to the table that follows in this chapter for instructions on what to do about the problem.

To access the details of a PLC Fault Table entry:

- For Windows-based PLC programming software, double-click the Fault Table entry and the details are displayed as “fault extra data”. Refer to Online Help in the PLC programming software for more information.
- For Logicmaster 90 programming software, select the Fault Table entry and press <CTRL-F> to view the fault details. The “fault extra data” are the long strings of digits on the right half of the message line. Refer to GFK-0265, *Logicmaster 90-70 Programming Software Reference Manual* or GFK-0467, *Series 90-30/20/Micro Programming Software Reference Manual*, for more information.

An example of the fault extra data is shown below:

<u>16000600030005</u>0000000000000000000000000000000000000

For Ethernet Interfaces the leftmost 14 digits of fault extra data (underlined in the example above) show the corresponding log Events (2 digits) and Entries 2, 3, and 4 (in that order, 4 digits each). The example above is reporting an Event 16, Entry 2=6, Entry 3=3, and Entry 4=5.

This information can be used to refer directly to detailed fault descriptions included in the Log event table under the LOG command in GFK-1186, *TCP/IP Ethernet Communications for the Series 90 PLC Station Manager Manual*.

PLC Fault Table Descriptions

PLC Fault	User Action
Backplane communications with PLC fault; lost request	User Action: Check to make sure you are not sending COMMREQs faster than the Ethernet Interface can process them. If problem persists, contact GE Fanuc Automation - NA.
Bad local application request; discarded request	User Action: Check for valid COMMREQ command code. If problem persists, contact GE Fanuc Automation - NA.
Bad remote application request; discarded request	User Action: Try to validate the operation of the remote node. If problem persists, contact GE Fanuc Automation - NA.
Can't locate remote node; discarded request	Error reported when message received where IP/MAC address cannot be resolved. Error may indicate that remote host is not operational on the network. User Action: Check that remote host is operational on network and its addresses are correct.
Comm_req - Bad task ID programmed	Message from PLC for unknown Ethernet Interface task. User Action: Check COMMREQ function block.
Comm_req - Wait mode not allowed	User Action: Check COMMREQ to make sure sent in no-wait mode.
Config'd gateway addr bad; can't talk off local net	Error in configuration. Verify IP address, Subnetwork Mask, and default Gateway IP address are correct.
Connection to remote node failed; resuming without it	Underlying communications software detects error transferring data; resuming. If persistent error, check connection to LAN and operation of remote node.
LAN controller fault; restart LAN I/F	User Action: HW fault, perform power cycle. If problem persists, contact GE Fanuc Automation - NA.
LAN controller Tx underflow; attempt recovery	Internal system error. User Action: If problem persists, contact GE Fanuc Automation - NA.
LAN controller underrun/overrun; resuming	Internal system error. User Action: If problem persists, contact GE Fanuc Automation - NA.
LAN data memory exhausted - check parms; resuming	The Ethernet Interface does not have free memory to process communications. User Action: If problem persists, contact GE Fanuc Automation - NA.
LAN duplicate MAC Address; resuming	A frame was received in which the source MAC Address was the same as this station's MAC Address. All stations on a network must have a unique MAC address. Immediately isolate the offending station; it may be necessary to turn it off or disconnect it from the network. This station remains Online unless you intervene to take it Offline.
LAN controller fuse blown; off network	*(Series 90-70 Ethernet Interface (Type 2) and Series 90-30 CPU364)* The network port fuse is blown; port is unusable. Isolate and correct the cause of the problem, then replace the fuse or the Ethernet Interface.

PLC Fault Table Descriptions (Continued)

PLC Fault	User Action
LAN I/F can't init - check parms; running soft Sw utl	Internal system error. User Action: If problem persists, contact GE Fanuc Automation - NA.
LAN I/F capacity exceeded; discarded request	Verify that connection limits are not being exceeded.
LAN interface hardware failure; switched off network	User Action: Replace Ethernet Interface.
LAN network problem exists; performance degraded	Excessive backlog of transmission requests due to excessive traffic on the network. For a sustained period the MAC was unable to send frames as quickly as requested. User Action: If problem persists, contact GE Fanuc Automation - NA.
LAN severe network problem; attempting recovery	External condition prevented transmission of frame in specified timeframe. Could be busy network or network problem. User Action: Check transceiver to make sure it is securely attached to the network. Check for unterminated trunk cable.
LAN system-software fault; aborted connection resuming	Internal system error. User Action: If problem persists, contact GE Fanuc Automation - NA.
LAN system-software fault; restarted LAN I/F	Internal system error. User Action: If problem persists, contact GE Fanuc Automation - NA.
LAN system-software fault; resuming	Internal system error. User Action: If problem persists, contact GE Fanuc Automation - NA.
LAN transceiver fault; OFF network until fixed	Transceiver or transceiver cable failed or became disconnected. User Action: Reattach the cable or replace the transceiver cable. Check SQE test switch if present on transceiver.
Local request to send was rejected; discarded request	Internal error. Check that the Ethernet Interface is online. User Action: If problem persists, contact GE Fanuc Automation - NA.
Memory backup fault; may lose config/log on restart	Internal error accessing FLASH device. User Action: If problem persists, contact GE Fanuc Automation - NA. Replace Ethernet Interface.
Module software corrupted; requesting reload	Catastrophic internal system error. Contact GE Fanuc Automation - NA.
Module state doesn't permit Comm_Req; discarded	COMMREQ received when Ethernet Interface cannot process COMMREQ. User Action: Make sure Ethernet Interface is configured and online.
Unsupported feature in configuration	PLC firmware does not support Ethernet communications software or attempt has been made to configure a feature not supported by the Ethernet Interface. User Action: Check CPU and Ethernet Interface revisions, order upgrade kit for CPU and/or Ethernet Interface.
Network Adapter does not support Ethernet Global Data	Ethernet Interface does not support Ethernet Global Data operation. User Action: Check Ethernet Interface revision; order upgrade kit for Ethernet Interface.

Appendix A Glossary

This appendix contains a list of conventional communications terms.

Adapter Name A name assigned to locally identify a module (e.g., an Ethernet Interface) in the local station. (See also Network Address Name.)

Address Administration The assignment of LAN addresses locally or on a universal basis.

Address Field The part of a Protocol Data Unit (PDU) that contains an address.

Address Resolution Protocol (ARP) The Internet Protocol that binds dynamically a high-level Internet Address to a low-level physical hardware address such as a MAC address.

Advanced User Parameters (AUP) .....

Apple Attachment Unit Interface (AAUI) A lower power, smaller connector adaptation of the IEEE 802.3 AUI.

Attachment Unit Interface (AUI) In a network node on a Local Area Network, the interface between the medium attachment unit (MAU) and the data terminal equipment. Often called "transceiver cable".

AUI/AAUI Port A connector on the network interface.

AUI/AAUI Cable The cable between the AUI/AAUI port and the transceiver (some transceivers plug directly into the AUI/AAUI port, thus requiring no separate cable).

AUP See Advance User Parameters.

BOOTP BOOTP is a bootstrap protocol that allows a TCP/IP network node (such as a Series 90 PLC with Ethernet Interface) to discover its own IP address and other configuration information. This information is supplied from a BOOTP Server device on the network.

Bridge A functional unit that interconnects two Local Area Networks (LANs) that use the same logical link control protocol, but may use different medium access control protocols. A bridge connects network nodes at the Data Link Layer, ISO layer 2.

Broadcast Sending of a frame that is intended to be accepted by all other nodes on the same Local Area Network.

Broadcast Address A LAN group address that identifies the set of all nodes on a Local Area Network.

Bus Network A Local Area Network in which there is only one path between any two network nodes and in which data transmitted by any node is available to all other nodes connected to the same transmission medium. NOTE: A bus network may be linear, star, or tree topology.

Carrier Sense In a Local Area Network, an ongoing activity of a network node to detect whether another node is transmitting.

Carrier Sense Multiple Access with Collision Detection (CSMA/CD) A bus network in which the medium access control protocol requires carrier sense and in which exception conditions caused by collisions are resolved by retransmission.

Channel An association in a client PLC between the PLC application program and an Ethernet Interface in that same PLC. The ladder program initiates the channel when it issues a Communications Request (COMMREQ) to its local Ethernet Interface. In turn, this local Ethernet Interface initiates a *connection* to a remote server and then makes periodic data transfers between the client and server PLCs. (See also Connection.)

Channel Status Bits The Channel Status bits comprise bits 17-80 (64 bits) of the status indication area. For SRTP Channels, these bits consist of an *error* bit and a *data transfer* bit for each of the channels that can be established. For Modbus/TCP Channels, there is a Connection Open bit and one reserved bit for each possible channel. Status bits for unused channels are always set to zero.

Client A node that requests network services from a server. A client PLC initiates a communications request. (See also Server.)

Collision A condition that results from concurrent transmissions by two or more nodes on the transmission medium.

Collision Domain A single CSMA/CD network. If two or more nodes are within the same collision domain and both transmit at the same time, a collision will occur. Nodes separated by a repeater are within the same collision domain. Nodes separated by a bridge are within different collision domains.

Command Dictionary Provides an alphabetical listing of the LAN Interface commands.

Command Field That part of a protocol data unit (PDU) that contains commands, as opposed to the address field and information field.

COMMREQ Function Block The COMMREQ Function Block is the Series 90 PLC ladder instruction used to initiate a communications request.

COMMREQ Status Word (CRS Word) The 16-bit CRS word receives the initial status of the Series 90 PLC communication request from the Series 90 module to which the communication request was addressed. The location of the CRS word is assigned, for each COMMREQ function, in the common area of the COMMREQ Command Block.

Communication Configuration Utility A utility used by the Windows-based PLC programming software and the Host Communications Toolkit to configure local communication parameters for connecting to PLCs.

Communications Window A part of the PLC scan that provides an opportunity for the LAN Interface to read and write PLC memory. The window is executed automatically once per PLC scan.

Connection An association between a client and server on a network, used to reliably transfer data between the two. Here, usually refers to a TCP or an SRTP connection, where the client, server, or both are PLCs. (See also Channel.)

Consumer In Ethernet Global Data, a device (such as a PLC) that receives a data exchange from a Producer. (See also Producer, Exchange.)

CRS Word See COMMREQ Status Word.

CSMA/CD See Carrier Sense Multiple Access with Collision Detection.

Data Communications Equipment (DCE) Examples: Modems and transceivers. Distinct from DTE, Data Terminal Equipment.

Data Link Layer In Open Systems Interconnection architecture, the layer (Layer 2) that provides services to transfer data over a physical link between open systems. Consists of the LLC and MAC sublayers.

Data Terminal Equipment Examples: computers, terminals, printers. Distinct from DCE, Data Communications Equipment.

DCS Words See Detailed Channel Status Words.

Detailed Channel Status Words Two status words containing detailed information on a single Series 90 channel. The DCS words are retrieved using the Retrieve Detailed Channel Status Command.

Directory Information Base (DIB) A collection of information used for directory services (like name resolution). In this document DIB refers to the DDP database which is actually distributed among all DDP devices instead of in a single name server. (See also Distributed Directory Protocol (DDP)).

Distributed Directory Protocol (DDP) The GE Fanuc proprietary protocol used to provide distributed name service on a TCP/IP Ethernet network. The distributed nature of DDP means that there is no centralized name server.

Domain Name System (DNS) The predominant name service protocol used by the Internet. DNS is primarily used to resolve a name into an IP address.

Dotted-Decimal The notation for IP, gateway, and name server addresses as well as the subnet mask. It consists of 4 decimal numbers (0-255) separated by periods. Example IP address: 10.0.0.1

Duplex The ability to send and receive data simultaneously (full duplex) or not (half duplex).

Dynamic Host Configuration Protocol (DHCP) A superset of the BOOTP protocol (See BOOTP.)

Ethernet Global Data (EGD) A proprietary protocol that provides efficient connectionless periodic data transfer over an Ethernet network. Operates over the UDP protocol.

Ethernet Interface The general term used in this manual to identify the GE Fanuc hardware module, with or without software, that connects a PLC (or CNC) to a network. It may also appear in the shortened form, “Interface”. (See also LAN Interface.)

Exchange In Ethernet Global Data, a set of variables or memory locations within the PLC or other device to be transferred from a Producer to a Consumer. (See also Producer, Consumer.)

Exchange ID In Ethernet Global Data, a numerical value assigned by the user to identify a specific data exchange to be sent by the producing device. (See also Producer, Consumer, Exchange.)

Exchange Status Word The 16-bit Exchange Status word continuously indicates the status of an Ethernet Global Data exchange.

Extended Netid See Subnet Id.

Flash Memory A type of read-only memory that can be erased and reprogrammed under local software control. It is used to store data that must be preserved when power is off.

Frame A data structure that consists of fields, predetermined by a protocol, for the transmission of user data and control data.

Gateway A special purpose, dedicated computer that attaches to two or more (sub)networks and routes packets from one to the other. In particular, an Internet gateway routes IP datagrams among the networks to which it connects. Gateways route packets to other gateways until they can be delivered to the final destination directly across the physical (sub)network. (Also sometimes referred to as a router.) A gateway or router connects network nodes at the Network Layer, ISO layer 3.

Global Address Administration Address administration in which all LAN individual addresses are unique within the same or other Local Area Networks. (See also Local Address Administration.)

Global Data See Ethernet Global Data.

Group Address An IP multicast address that identifies a group of network nodes on a Local Area Network.

Host A computer or workstation that communicates with stations such as PLCs or CNCs across a network, especially one that performs supervisory or control functions. Note that this same term is widely used in TCP/IP literature to refer to any network node that can be a source or destination for network messages. (See also Hostid.)

Host Group A group IP address used to receive multicast IP messages from the network. Host Group addresses must be valid Class D (multicast) IP addresses.

Hostid The hostid is the part of the IP address identifying the host on the network. (See also Netid.)

Hub See Repeater

IEEE 802 The IEEE 802 LAN series of standards are as follows:

IEEE 802 Overview and Architecture.

IEEE 802.2 The Logical Link Control (LLC) sublayer of OSI Data Link Layer common above all IEEE 802 Medium Access Control (MAC) sublayers.

IEEE 802.3 CSMA/CD (Ethernet) MAC and Physical Layer standard.

IEEE 802.4 Token Bus (MAP LANs) MAC and Physical Layer standard.

IEEE 802.5 Token Ring (IBM) MAC and Physical Layer standard.

Information Field That part of a protocol data unit (PDU) that contains data, as opposed to the address field and command field.

Initiating Station The station from which an instance of communication (a transaction) originates. Also referred to as “client”.

Interface Shortened form for “Ethernet Interface”. The general term used in this manual to identify the GE Fanuc hardware module, with or without software, that connects a PLC (or CNC) to a network. (See also LAN Interface.)

Internet Address A unique Internet address identifies each node on an IP network (or system of connected networks). The Internet address is assigned to the node by the user. (Also known as an IP address.) (See also Physical Address.)

Internet Control Message Protocol (ICMP) The Internet standard protocol that handles error and control messages.

Internet Group Management Protocol (IGMP) The Internet standard protocol that handles multicast group management messages.

Internet Protocol (IP) The Internet standard protocol that defines the Internet datagram and provides the basis for the Internet packet delivery service. (See also Transmission Control Protocol (TCP).)

Inter Repeater Link (IRL) A mechanism for interconnecting two and only two repeater units. The Inter Repeater Link acts at the Physical Layer, ISO layer 1.

IP Address See Internet Address.

LAN Interface A term used in this manual to identify the GE Fanuc hardware module, with or without software, that connects a PLC or CNC to a network.

LAN Interface Status Bits (LIS Bits) The LIS bits comprise bits 1-16 of an 80-bit status bit area. The location of this 80-bit status area is assigned using the PLC programming software in the "Status Address" field. The LIS bits contain information on the status of the Local Area Network (LAN) and the Ethernet Interface itself.

Linear Topology A network topology in which nodes are each connected at a point along a common continuous cable which has no loops and only two endpoints.

Link Service Access Point (LSAP) A Data Link layer SAP. A single byte that identifies the routing of data received by the network node.

LIS Bits See LAN Interface Status Bits.

Local Address Administration Address administration in which all LAN individual addresses are unique within the same Local Area Network. (See also, Global Address Administration.)

Local Area Network (LAN) A computer network located on a user's premises within a limited geographical area.

Local Broadcast A transmission which is directed to every available receiver in the local IP subnet of the transmitter. A local broadcast is never routed to LANs outside of the local IP subnet.

Local Station The station at your immediate location, i.e., "here". (See also Remote Station.)

Log Events Events recorded in the system exception log for the LAN Interface. The maximum number of events in the exception log is 16.

Logical Link Control (LLC) Protocol In a Local Area Network, the protocol that governs the exchange of frames between network nodes independently of how the transmission medium is shared.

MAC Address The Medium Access Control (MAC) address is a 12–digit hexadecimal number that identifies a node on a local network. Each Ethernet Interface has its own unique MAC address.

Medium Access Control (MAC) In a Local Area Network (LAN), the part of the protocol that governs write (or transmission) access to the transmission medium independently of the physical characteristics of the medium, but taking into account the topological aspects of the network, in order to enable the exchange of data between network nodes. The MAC layer is the lower sublayer of the Data Link Layer, ISO layer 2.

Medium Attachment Unit (MAU) In a network node on a Local Area Network (LAN), a device used to couple the data terminal equipment (DTE) to the transmission medium. Often

called “transceiver”. The MAU may be built into the DTE or it may be a separate unit that attaches to the DTE through an AUI.

Modbus A data transfer protocol. Called **Modbus/TCP** when Ethernet media is used, called **Modbus/RTU** (or simply “Modbus”) when serial media is used.

Multicast The transmission scheme in which a limited group of multiple receivers are the intended target of a transmission.

Multicast Address A LAN group address that identifies a subset of the network nodes on a Local Area Network.

Multiple Gateway Routing The capability of an Ethernet Interface to route a received message to either the default gateway or one of additional gateways configured at the Ethernet Interface.

Name Resolution A “hidden” process that permits application programs to address network nodes using a symbolic name (Network Address Name) in lieu of a numeric IP address.

Netid The netid is the part of the IP address identifying the network on which the node resides. (See also Hostid.)

Network An arrangement of nodes and interconnecting branches.

Network Adapter The device, such as the Ethernet Interface, providing communications services for a particular network.

Network Address Name A character string that is used in lieu of an IP address. The client and/or server device uses Name Resolution to resolve this symbolic name into the actual IP address. This name represents the address on the network of a particular network adapter. Also referred to as “Adapter Name”.

Network Switch An Ethernet device that dynamically connects two communicating nodes without propagating the data to other Ethernet devices also connected to the switch.

Node The physical module that connects a node to the network. The Ethernet Interface is an example of a node. It connects a station (PLC or CNC) to a network (Factory LAN). A station may contain more than one Ethernet Interface and therefore contains more than one node.

Octet A group of 8 bits operated on as a single unit. (See also Byte.)

One-Way Propagation Time See Transmission Path Delay.

Path The sequence of segments and repeaters providing the connectivity between two DTEs. In CSMA/CD networks, there is one and only one path between any two DTEs.

Peer Another entity at the same level (layer) in the communication hierarchy.

Peer-Peer Communication between nodes at the same level or layer in the hierarchy.

Physical Address The unique physical layer address associated with a particular node on the Local Area Network (LAN). Ethernet physical addresses are typically assigned by the manufacturer. (See for comparison, Internet Address.)

Producer In Ethernet Global Data, a device (such as a PLC) that periodically produces new samples of data (data exchange). (See also Consumer, Exchange.)

Producer ID In Ethernet Global Data, a dotted-decimal number used to uniquely identify a Producer device (such as an entire PLC system) on the network. (See also Producer, Consumer, and Exchange.)

Protocol A set of rules for exchanging messages between two communicating processes.

Protocol Data Unit (PDU) Information that is delivered as a unit between peer entities of a Local Area Network (LAN) and that contains control information, address information, and may contain data.

Remote Station A station located elsewhere on the network. (See also Local Station.)

Repeater In a Local Area Network (LAN), a device that amplifies and regenerates signals to extend the range of transmission between network nodes or to interconnect two or more segments. A repeater connects network nodes at the Physical Layer, ISO layer 1.

Responding Station A station which generates a message in response to a command that was directed to the station.

Round-Trip Propagation Time Twice the time required for a bit to travel between the two most distant nodes in a bus network.

NOTE: In a network using carrier sense, each frame must be long enough so that a collision or jam signal may be detected by the transmitting node while this frame is being transmitted. Its minimum length is therefore determined by the round-trip propagation time.

Router A device similar to a bridge that allows access to multiple LANs. Also known as a gateway in Internet terminology. A router connects network nodes at the Network Layer, ISO layer 3. (See also Gateway.)

Server A network node that provides specific services to other network nodes (clients). (See also Client.)

EXAMPLE: File server, print server, name server, time server.

Service Request Transfer Protocol (SRTP) A proprietary protocol that encodes Series 90 "Service Requests", the native language of the Series 90 PLC CPUs, to provide general purpose communications with a Series 90 PLC. SRTP is presently available over 802.3/Ethernet networks. SRTP is also used by the PLC programming software to communicate over an Ethernet network.

Signal Quality Error (SQE) An indication from the MAU (transceiver) to the Ethernet Interface to indicate any of three conditions: 1) improper signals received from the medium, 2) collision detected, or 3) SQE message test.

Simple Network Time Protocol (SNTP) The Internet standard protocol used to synchronize the real-time clocks of hosts over the network. (See also Time Synchronization.)

Slot Time (in a CSMA/CD network) Minimum bitrate-dependent unit of time which, in case of collision, is used to determine the delay after which network nodes may attempt to retransmit. [Slot time for all IEEE 802.3 10 Mbps implementations is 51.2 µsec (512 bit times)].

Soft Switches Basic system information set up by the PLC programming software and transferred to the LAN Interface upon powerup or restart.

Station A computer, PLC, or other device that connects to one or more networks. (See also Node.)

Station Address Each node on an Ethernet network must have a unique MAC address which is different from all other nodes on the network. This is a 12–digit hexadecimal MAC address. (See also MAC Address.)

Station Manager A part of the basic Ethernet Interface communications software that executes as a background activity on the Ethernet Interface. The Station Manager provides interactive

supervisory access to the Ethernet Interface. The Station Manager may be accessed locally via the serial port, or remotely over the LAN.

Stratum The number provided by an SNTP server that indicates the server's relation to a "true" time source. The lower the stratum number, the closer that particular SNTP server is to a "true" time source. A "true" time source is usually based on an atomic clock such as the broadcast signal transmitted by the Naval Observatory or GPS (Global Positioning System) satellite signals. If configured for SNTP synchronization, Series 90 Ethernet Interfaces automatically synchronize to the SNTP server with the lowest stratum number.

Subnet, Subnet Id, Subnet Mask The subnet mask is a mechanism to logically divide a large network into smaller *subnets* according to your local assignment of IP addresses to nodes on the network. Nodes on the network which have their IP addresses alike for the bits specified in the subnet mask can talk to each other *directly*; nodes whose IP addresses are not alike in these same bits must talk *indirectly*, via an intermediate gateway or router.

The 32 bits of an IP address are divided between a *net id* part and a *host id* part. (The *class* of the IP address determines how many bits are in the *net id* and how many are in the *host id.)* In general, the *net id* portion of the IP address (on the left) is assigned by the Internet authorities. The *host id* portion (on the right) is assigned by your local network administrator. *Subnetting* is locally optional and consists of designating some (any number) of the *host id* bits as an extended *net id*, or *subnet id*. The added *subnet id* bits are normally taken from the *host id* bits adjacent to the *net id,* and the **subnet mask** identifies these bits. In your Ethernet module configuration, you specify these bits as one (1) and the remaining *host id* bits as zero (0). For further information, refer to Chapter 5, "Network Administration Support".

Tally Counters kept by the LAN Interface to indicate load and performance information.

TCP/IP Commonly refers to the entire suite of protocols that run over IP. Includes, but is not limited to IP, TCP, ARP, UDP, ICMP, and IGMP.

Time Synchronization The ability to synchronize the internal time clock of an Ethernet Interface to time signals from a remote time server on the network. Time synchronization is useful in conjunction with Ethernet Global Data.

Topology The pattern formed by the physical medium interconnecting the nodes of a network.

Transceiver See Medium Attachment Unit (MAU).

Transceiver Cable See Attachment Unit Interface (AUI).

Transmission Control Protocol (TCP) The Internet standard connection-oriented transport level protocol. (See also Internet Protocol (IP).)

Transmission Path Delay The time required for a bit to travel between the two most distant network nodes in a bus network.

Unicast. The transmission scheme in which exactly one receiver is specified as the target of a transmission.

Universal Address Administration See Global Address Administration.

User Datagram Protocol (UDP) The Internet standard connectionless transport level protocol.

Appendix B Communications Port Characteristics

This appendix contains a description of each of the ports for the Ethernet Interfaces. The ports for each Ethernet Interface are listed below from top to bottom as they appear on the module.

IC693CMM321 (10Base-T Type) Series 90-30 Ethernet Interface, Ports

- RS-232, RJ-11 Serial Port (combined Station Manager and Software Loader Port)
- 10Base-T, RJ-45 Port (Network Port)
- AAUI Port (Network Port), accessed from bottom of module

IC693CPU364 Series 90-30 CPU364 Embedded Ethernet Interface, Ports

- RS-232, RJ-11 Serial Port (combined Station Manager and Software Loader Port)
- AAUI Port (Network Port)
- 10Base-T, RJ-45 Port (Network Port)

IC693CPU374 Series 90-30 CPU374 Embedded Ethernet Interface, Ports

- RS-232, RJ-11 Serial Port (Station Manager Port)
- Two 10Base-T/100Base Tx, RJ-45 Ports (Embedded Switch Ports)

IC697CMM742 Series 90-70 Ethernet Interface (Type 2), Ports

- RS-232, RJ-11 Serial Port (Station Manager Port)
- RS-485, 15-pin, D-type Serial Port (Software Loader Port)
- 10Base-T, RJ-45 Port (Network Port)
- AUI Port (Network Port)
- 10Base2, BNC Port (Network Port)

IC693CMM321 (AAUI-only Type) Series 90-30 Ethernet Interface, Ports

- RS-232, RJ-11 Serial Port (Station Manager Port)
- RS-485, 15-pin, D-type Serial Port (Software Loader Port)
- AAUI Port (Network Port), accessed from bottom of module

RS-232, RJ-11 Serial Port

The 6-pin, RJ-11 “modular phone jack”, RS-232 port is used for the following purposes:

Products	Purposes of Port
▪ IC693CMM321(AAUI-only Type) ▪ IC693CPU374 ▪ IC697CMM742	Local Station Manager connection (only).
▪ IC693CMM321 (10Base-T Type) ▪ IC693CPU364	Local Station Manager connection AND Software Loader connection (for updating firmware).

Port Settings

The serial (COM) port of the terminal or PC that is connected to the Ethernet Interface must use the same communications parameters as the Ethernet Interface.

The default values for the Station Manager port are 9600 bps, 8 bits, no parity, and 1 stop bit. If the Ethernet Interface is configured with default values for this port, or the Ethernet Interface has not been configured, use these default values. If the Ethernet Interface is configured with non-default values for this port, use those values for the serial port settings of the terminal or PC.

The default values for the Software Loader port (this connector is used as the Software Loader port only for those modules specified in the lowest row of the table above) are 19,200 bps, 8 bits, Odd parity, and 1 stop bit. If the Ethernet Interface is configured with default values for this port, or the Ethernet Interface has not been configured, use these default values. If the Ethernet Interface is configured with non-default values for this port, use those values for the serial port settings of the terminal or PC.

Port Pinout

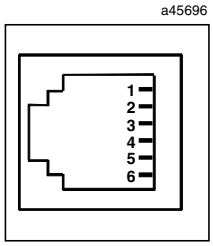

Station Manager Serial Port Pinout

RJ-11 Port Pin Number	Signal	Description
1	CTS	Clear To Send (input)
2	TD	Transmit Data (output)
3	SG	Signal Ground
4	SG	Signal Ground
5	RD	Receive Data (input)
6	RTS	Request to Send (output)

Station Manager Serial Cable (IC693CBL316A)

Use the serial cable (IC693CBL316A) to connect your PC to the Station Manager port.

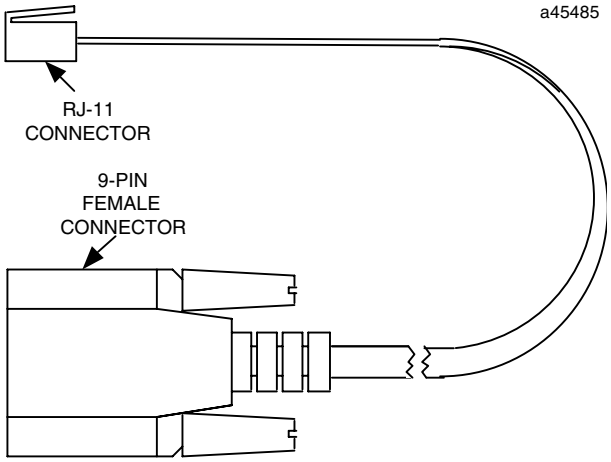

If your terminal or PC is unable to communicate with the Ethernet Interface through the RS-232 port, consult the documentation for your terminal or PC to verify that your connection is wired correctly.

Serial Cable (IC693CBL316A) Connector Pinouts

9-Pin Connector Pin Number	RJ-11 Connector Pin Number
7	1
2	2
5	3
5	4
3	5
8	6

RS-485, 15-Pin, D-Type Port

The 15-pin, D-type, RS-485 port is used on the IC693CMM321 (AAUI-only Type) of the Series 90-30 Ethernet Interface and on the Series 90-70 Ethernet Interface module CMM742. It is used to connect to the PC Software Loader when the communications firmware in the Ethernet Interface is to be updated. The Series 90-30 CPU364 Embedded Ethernet Interface uses the RJ-11 port to connect to the Software Loader.

An RS-232 to RS-485 converter is required to interface to systems that provide RS-232 compatible interfaces.

Port Settings

The serial port of the terminal or PC that is connected to the Ethernet Interface must use the same communications parameters as the Ethernet Interface.

The default values for the Software Loader port are 19,200 bps, 8 bits, Odd parity, and 1 stop bit. If the Ethernet Interface is configured with default values for this port, or the Ethernet Interface has not been configured, use these default values. If the Ethernet Interface is configured with non-default values for this port, use those values for the serial port settings of the terminal or PC.

Software Loader Port Pinout

Pin Number	Signal Name	Description
1	Shield	
2		No Connection
3		No Connection
4		No Connection
5	+5V *	+5V Power for RS-232/485 Converter
6	RTS (A)	Request To Send
7	Signal Ground	Signal Ground, 0V
8	CTS (B’)	Clear To Send
9	RT *	Terminating Resistor for RD **
10	RD (A’)	Receive Data
11	RD (B’)	Receive Data
12	SD (A)	Send Data
13	SD (B)	Send Data
14	RTS (B)	Request To Send
15	CTS (A’)	Clear To Send

* Signals available at the Connector but are not included in the RS-485 specification.
SD (Send Data) and RD (Receive Data) are the same as TxD and RXD (used in the Series Six PLC).
(A) and (B) are the same as - and + . A and B denote outputs, and A’ and B’ denote inputs.

** Termination resistance for the Receive Data (RD) signal needs to be connected only on units at the end of multidrop lines. This termination is made by connecting a jumper between pins 9 and 10 inside the 15-pin D-shell; the termination is provided in the adapters and cables specified in the next table.

Part Numbers for GE Fanuc Cables and Converters

It is recommended that you use cables available from GE Fanuc Automation to connect your PC to this port. Refer to the table below for part numbers.

Cables for Connecting the 15-Pin, D-Type, RS-485 Port to the RS-232 Port on a PC

Part Number	Description
IC690ACC901	GE Fanuc/Horner Mini Converter with Cable (see the following figure.), or
IC690ACC900	GE Fanuc Converter only (requires cable IC690CBL303 and either IC690CBL702 or IC690CBL705 below)
IC690CBL303	15-pin RS-422 Serial Cable
IC690CBL702	9-pin RS-232 Serial Cable
IC690CBL705	25-pin RS-232 Serial Cable

Cable Assembly IC690ACC901

Cable assembly IC690ACC901 is needed to connect the 9-pin or 25-pin serial port on a personal computer to the 15-pin, D-type, RS-485 port on the Ethernet Interface. Use the 9-pin to 25-pin adapter to connect to the 25-pin serial port on the personal computer.

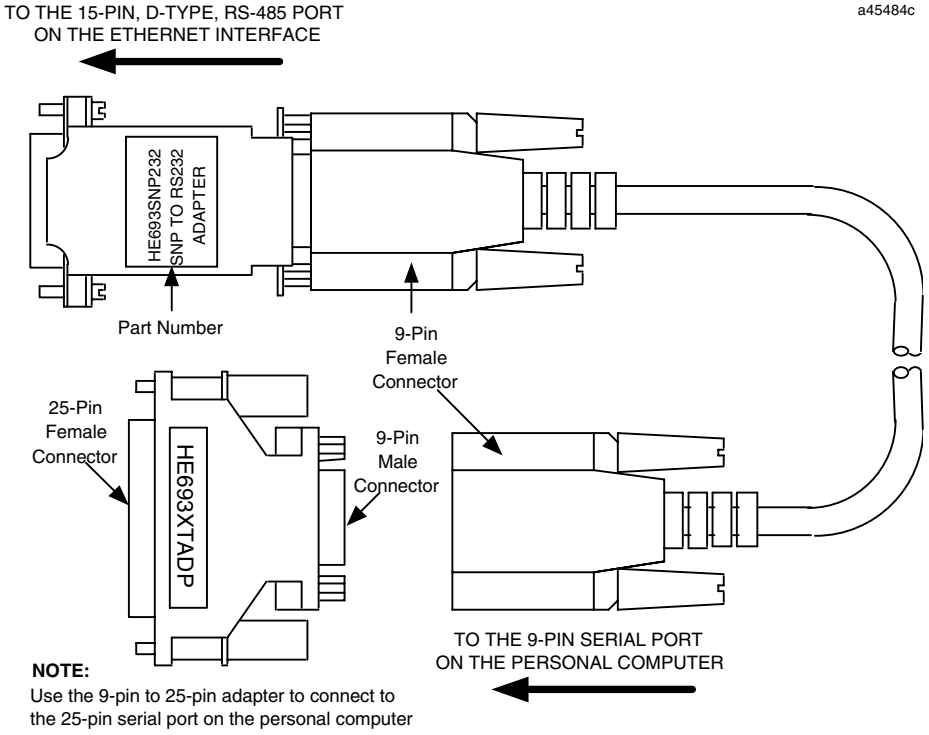

10Base-T Port

The Series 90-30 CPU364 Embedded Ethernet Interface, the IC693CMM321-FG and later versions, and the Series 90-70 Ethernet Interface (Type 2) are equipped with a 10Base-T port for direct connection to a 10Base-T (twisted pair) network without addition of an external transceiver. The 10Base-T port on the Ethernet Interface is connected to an external 10Base-T hub or repeater by a twisted pair cable.

Your 10Base-T twisted pair cables must meet the applicable IEEE 802 standards.

This section provides the information you need to specify the 10Base-T twisted pair cables, including 10Base-T port pinouts and cable diagrams.

10Base T Port Pinouts

The 10Base-T port is located on the front of the Ethernet Interface. This port is an 8-pin RJ-45 “modular phone jack” connector. It is used to connect the Ethernet Interface to a 10Base-T hub or repeater.

Pin Number	Signal	Description
1	TD+	Transmit Data +
2	TD–	Transmit Data –
3	RD+	Receive Data +
4	NC	No connection
5	NC	No connection
6	RD–	Receive Data –
7	NC	No connection
8	NC	No connection

Note

Pinouts are provided for troubleshooting purposes only. 10Base-T cables are readily available from commercial distributors. GE Fanuc recommends purchasing rather than making 10Base-T cables.

Connection to a 10Base T Network

Connection of the Ethernet Interface to a 10Base-T network is shown below:

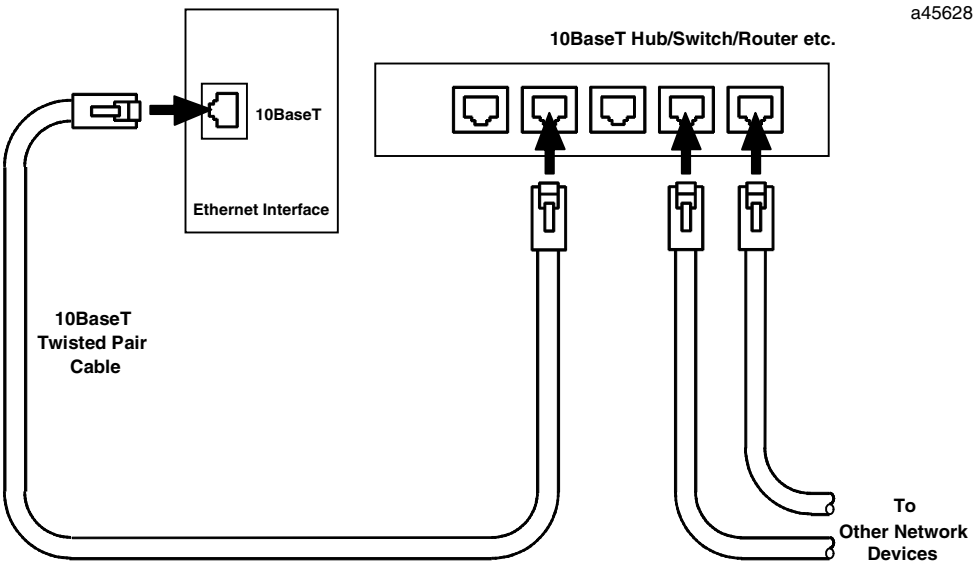

10Base-T/100Base Tx Port

The Series 90-30 CPU374 Embedded Ethernet Interface has an embedded switch that provides two external ports, each of which supports both 10Base-T and 100Base Tx operation using either full duplex or half duplex operation. Each switch port auto-negotiates (by default) to the correct link speed and duplex mode for the device connected to the other end of the link. Each port operates independently, so devices at two different speeds and/or duplex modes may be attached to the two ports. Each port also automatically detects the attached cable and will work properly with either straight-through or crossover cables (by default).

Caution

The two Ethernet ports on the Ethernet Interface must not be connected, directly or indirectly, to the same device. The connections in an Ethernet network based on twisted pair cabling must form a tree and not a ring, otherwise duplication of packets and network overload may occur.

Caution

The IEEE 802.3 standard strongly discourages the manual configuration of duplex mode for a port (as would be possible using Advanced User Parameters). Before manually configuring duplex mode for a CPU374 port using advanced user parameters (AUP), be sure that you know the characteristics of the link partner and are aware of the consequences of your selection. Setting both the speed and duplex AUP's on a CPU374 port will disable the port's auto-negotiation function. If its link partner is not similarly manually configured, this can result in the link partner concluding an incorrect duplex mode. In the words of the IEEE standard: "Connecting incompatible DTE/MAU combinations such as full duplex mode DTE to a half duplex mode MAU, or a full-duplex station (DTE or MAU) to a repeater or other half duplex network, can lead to severe network performance degradation, increased collisions, late collisions, CRC errors, and undetected data corruption."

The switch ports support both shielded and unshielded cables.

The 10Base-T/100Base Tx twisted pair cables must meet the applicable IEEE 802 standards.

This section provides the information you need to specify the 10Base-T/100Base Tx twisted pair cables, including port pinouts and cable diagrams.

10Base-T/100Base Tx Port Pinouts

The 10Base-T/100Base Tx port is located on the front of the Ethernet Interface. This port is an 8-pin RJ-45 “modular phone jack” connector. It is used to connect the Ethernet Interface to a hub, repeater, switch, or other Ethernet device.

Pin Number	Signal	Description
1	TD+	Transmit Data +
2	TD–	Transmit Data –
3	RD+	Receive Data +
4	NC	No connection
5	NC	No connection
6	RD–	Receive Data –
7	NC	No connection
8	NC	No connection

Note

Pinouts are provided for troubleshooting purposes only. 10Base-T/100BaseTx cables are readily available from commercial distributors. GE Fanuc recommends purchasing rather than making 10Base-T/100Base Tx cables.

Connection to a 10Base-T / 100Base Tx Network

Connection of the Ethernet Interface to a 10Base-T network is shown below:

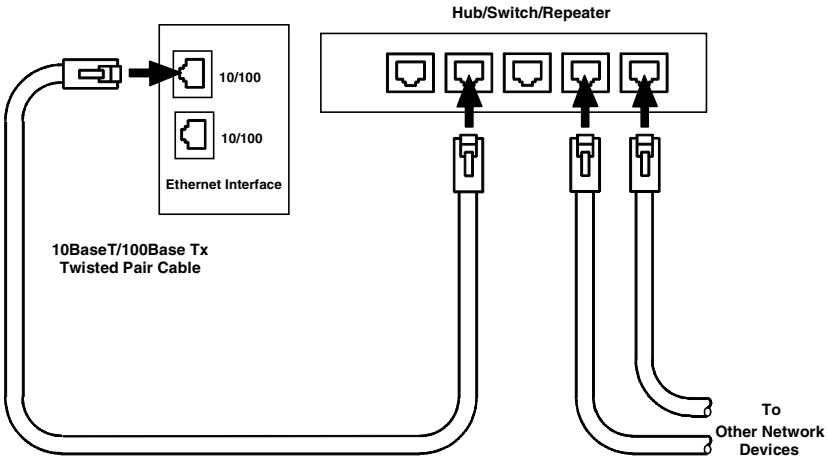

Direct Connection to the CPU374 Ethernet Interface

Connection of Ethernet devices directly to the Ethernet Interface is shown below:

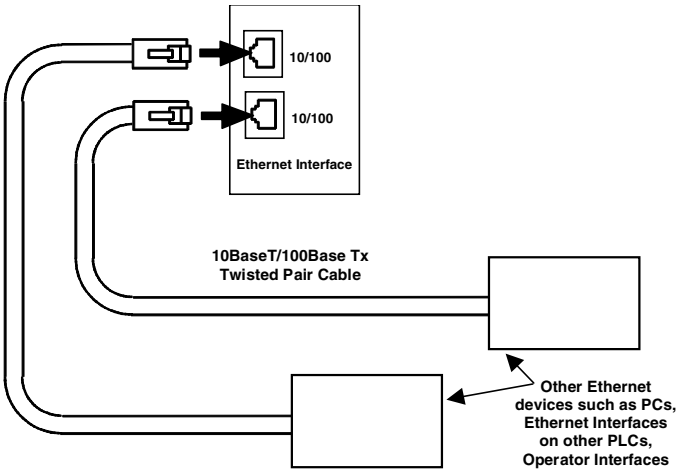

10Base2 Port

The IC697CMM742 Series 90-70 Ethernet Interface (Type 2) is equipped with a 10Base2 port for direct connection to a 10Base2 (thin wire) coaxial cable network, without addition of an external transceiver. The 10Base2 port on the Ethernet Interface is connected to the 10Base2 network cables by a BNC Adapter (female, male, female, in either “T” or “F”configurations).

Your 10Base2 network cables and connectors must meet the applicable IEEE 802 standards.

Information in this section includes 10Base2 port pinouts and cable diagrams.

10Base2 Port Pinouts

The 10Base2 port is located on the front of the Series 90-70 Ethernet Interface. This port is a female BNC coaxial connector. It is used to connect the Ethernet Interface to the 10Base2 network.

Pin Number	Signal	Description
S	TD/RD	Transmit and Receive Data
G	GND	Shield Ground

Note

Pinouts are provided for troubleshooting purposes only. 10Base2 cables are readily available from commercial distributors. GE Fanuc recommends purchasing rather than making 10Base2 cables.

Connecting the CMM742 Ethernet Interface to a 10Base2 Network with “T” Connector

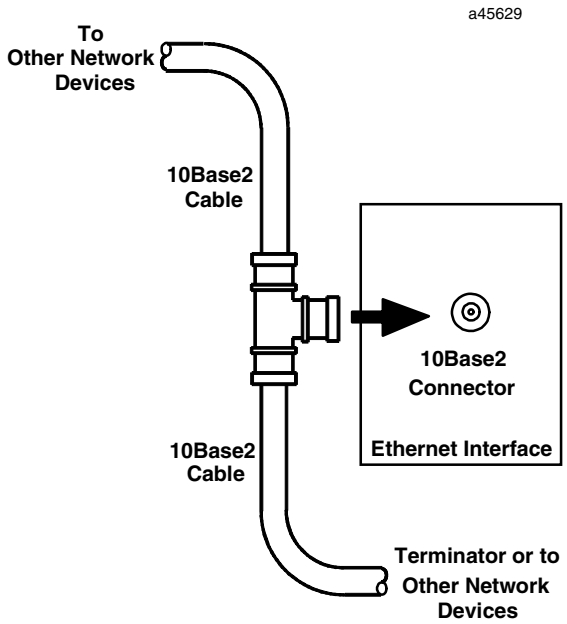

Connecting the CMM742 Ethernet Interface to a 10Base2 Network with “F” Connector

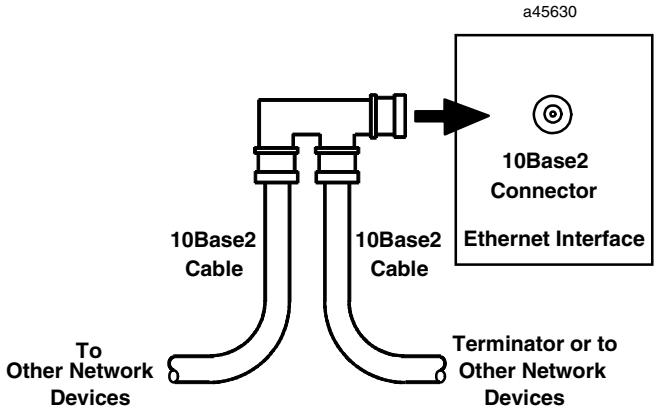

AAUI Port

The IC693CMM321 Series 90-30 Ethernet Interface and the Series 90-30 CPU364 Embedded Ethernet Interface are equipped with an Apple Attachment Unit Interface (AAUI) port for connecting to the network. Compatible transceivers can be purchased that support 10Base5 and 10Base2 coaxial cables as well as twisted pair and fiber optic cables. The AAUI standard makes your selection of transceiver and trunk cable medium transparent to the Ethernet Interface.

Your network cables must meet the applicable IEEE 802.3 standards.

This section presents the information you need to specify the cables and related components required for Ethernet Communications, including AAUI port pinouts and cable diagrams.

Ethernet AAUI Port Pinouts

The AAUI port is a 14-pin D-type female connector. It is used to connect the Ethernet Interface to an external transceiver.

Pin Number	Signal	Description
1	FN Pwr	+5V @ 1.9W
2	DI-A	Data In circuit A
3	DI-B	Data In circuit B
4	Vc	Voltage common
5	CI-A	Control In circuit A
6	CI-B	Control In circuit B
7	+5V	+5V from host
8	+5V	Secondary +5V from host
9	DO-A	Data Out circuit A
10	DO-B	Data Out circuit B
11	Vc	Secondary Voltage Common
12	-nc-	Reserved
13	-nc-	Reserved
14	FN Pwr	Secondary +5V
SHELL	PG	Protective Ground (Conductive shell and shield)

Note

Pinouts are provided for troubleshooting purposes only. Cables are readily available from commercial distributors. GE Fanuc recommends purchasing rather than making transceiver cables.

AAUI Transceiver Information

Depending on your particular application, any of several types of user-supplied transceivers may be used. Information on GE Fanuc transceivers as well as typical connection drawings for 10Base2 (thin wire) and 10Base-T (twisted pair) networks are shown in this section.

Note

Transceivers must be compatible with the IEEE 802.3 standard and must have the SQE option Enabled.

Caution

PLC power must be OFF when connecting or disconnecting the transceiver.

GE Fanuc Transceivers

GE Fanuc Catalog Number	Network Connection	Comments
IC649AEA102	10Base-T (RJ-45 connector)	Connects AAUI port to 10Base-T network.
IC649AEA103	10Base2 (BNC connector)	Connects AAUI port to 10Base2 network. (Replaces obsolete IC649AEA101 transceiver.)

IC649AEA102 Ethernet 10Base–T Transceiver

- Compliant with the IEEE 802.3 Ethernet specification for 10BASE–T.
- Connector on transceiver body is standard RJ–45 type for connection to unshielded twisted pair (UTP) Ethernet cable. .
- This unit has an attached 40” (1 meter) cable with standard 14–pin AAUI connector for connecting to a Series 90–30 Ethernet module (IC693CMM321) or CPU with Ethernet interface (IC693CPU364).
- SQE option is enabled.
- Power and Link Integrity LED indicator lights.

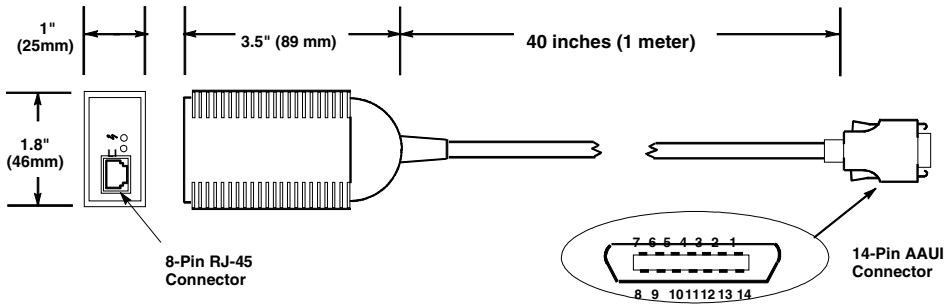

Power Requirement

This unit draws 60 mA @ 5Vdc from the Ethernet interface via the AAUI connector.

LED Indicator Lights

These are located on the end of the unit next to the RJ–45 connector. The one labeled LI stays on as long as Link Integrity is maintained. The one marked with a “jagged arrow” symbol indicates the presence of 5Vdc power to the unit.

IC649AEA102 Transceiver Connection

Note

Transceivers must be compatible with the IEEE 802.3 standard and must have the SQE option Enabled.

Caution

PLC power must be OFF when connecting or disconnecting the transceiver.

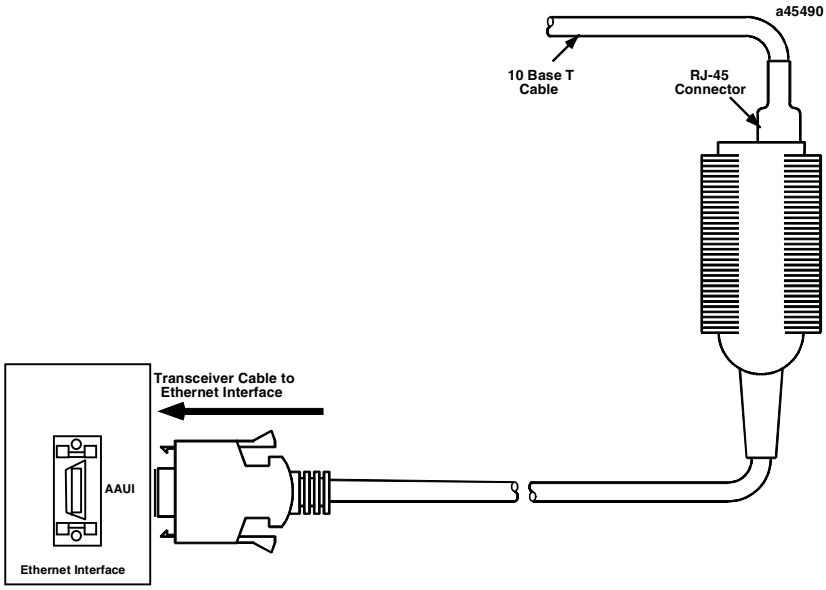

IC649AEA103 Ethernet 10Base2 Transceiver

Note: This transceiver replaces catalog number IC649AEA101

- Compliant with the IEEE 802.3 Ethernet specification for 10Base2.
- A standard BNC connector is mounted on the body of the transceiver for connection to thin coaxial Ethernet cable
- This unit has an attached 10” (254 mm) cable with standard 14–pin AAUI connector for connecting to a Series 90–30 Ethernet module (IC693CMM321) or CPU with Ethernet interface (IC693CPU364).
- SQE slide switch is set to enabled position at the factory. It must be in this position for proper operation with GE Fanuc Ethernet products IC693CMM321 and IC693CPU364 (see figure below).
- Power LED indicator light.

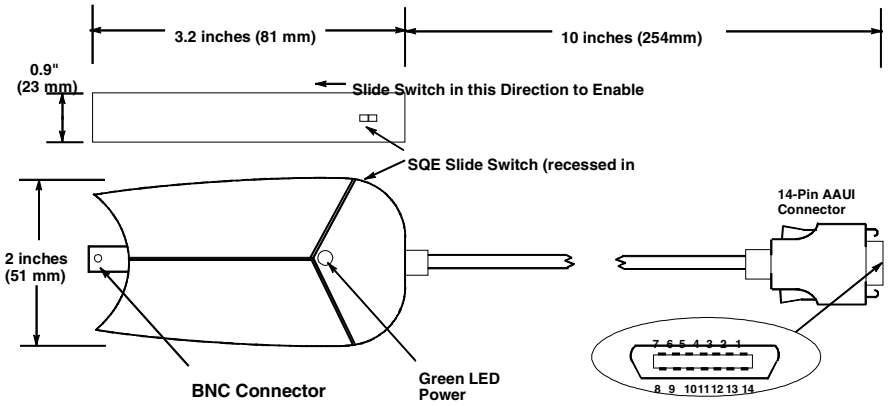

Power Requirement

This unit draws 400 mA @ 5Vdc from the Ethernet Interface via the AAUI connector.

LED Indicator Light

Located on the side of the unit as shown above. This green LED turns on to indicate the presence of 5Vdc power to the unit.

IC649AEA103 Transceiver Connection

Note

Transceivers must be compatible with the IEEE 802.3 standard and must have the SQE option Enabled.

Caution

PLC power must be OFF when connecting or disconnecting the transceiver.

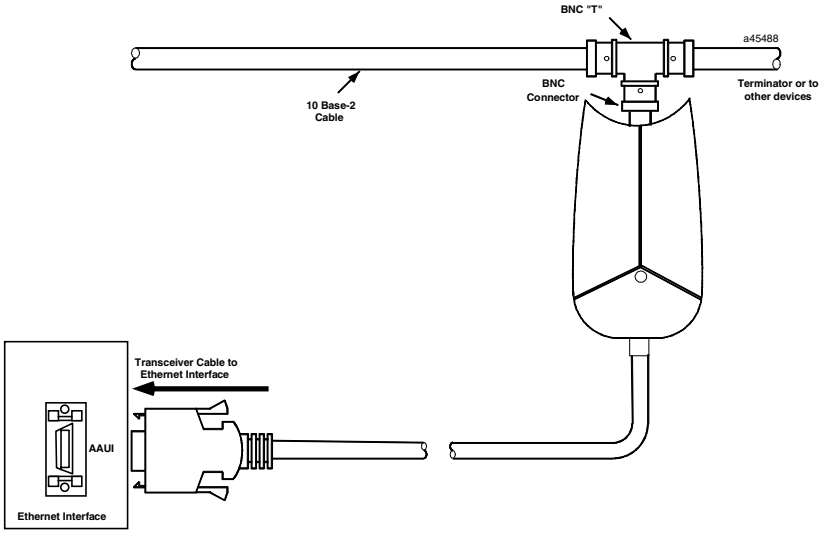

AUI Port

The IC697CMM742 Series 90-70 Ethernet Interface (Type 2) is equipped with an AUI port for connecting to the network. The IEEE 802.3 AUI (Attachment Unit Interface) is standard across a variety of different physical media. Compatible transceivers can be purchased that support 10Base5 and 10Base2 coaxial cables as well as twisted pair and fiber optic cables. The standard AUI makes your selection of transceiver and trunk cable medium transparent to the Ethernet Interface.

Your cables must meet the applicable IEEE 802.3 standards.

This section presents the information you need to specify the cables and related components required for Ethernet Communications, including Attachment Unit Interface (AUI) port pinouts and AUI cable diagrams.

Pinouts of the AUI Port

The AUI port is a 15-pin D-type female connector. It is used to connect the Ethernet Interface to an external transceiver.

Pin Number	Signal	Description
1	GND	Signal Ground
2	CP+	Collision Presence +
3	Tx+	Transmit +
4	GND	Signal Ground
5	RX+	Receive +
6	GND	Signal Ground
7	NC	Not Connected
8	GND	Signal Ground
9	CP-	Collision Presence -
10	Tx-	Transmit -
11	GND	Signal Ground
12	RX-	Receive -
13	+12	+12 Volts
14	GND	Signal Ground
15	NC	Not Connected
SHELL		Chassis Ground

Note

Pinouts are provided for troubleshooting purposes only. Cables are readily available from commercial distributors. GE Fanuc recommends purchasing rather than making transceiver cables.

AUI (Transceiver Cable) Connection

The figure below shows a typical cable configuration to connect the AUI port of the Ethernet Interface to an external transceiver.

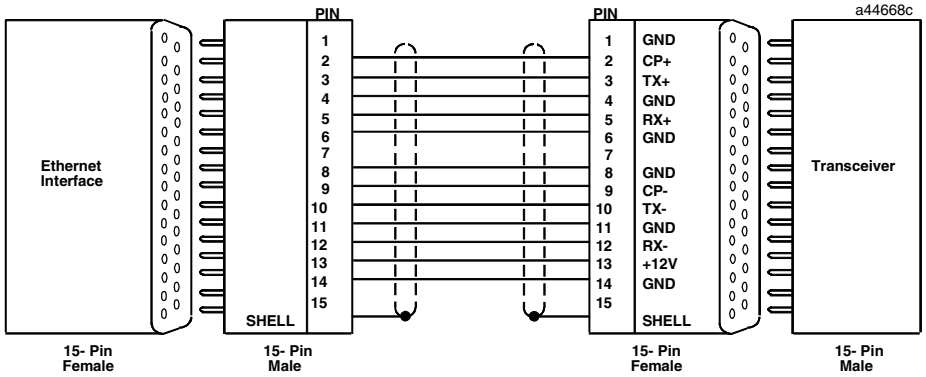

Note

Pinouts are provided for troubleshooting purposes only. Cables are readily available from commercial distributors. GE Fanuc recommends purchasing rather than making transceiver cables.

10Base2 Transceiver Description

Depending on your particular application, any of several types of user-supplied transceivers may be used. The two most commonly used in industrial environments are: 10Base5 and 10Base2. A typical 10Base2 configuration is shown below.

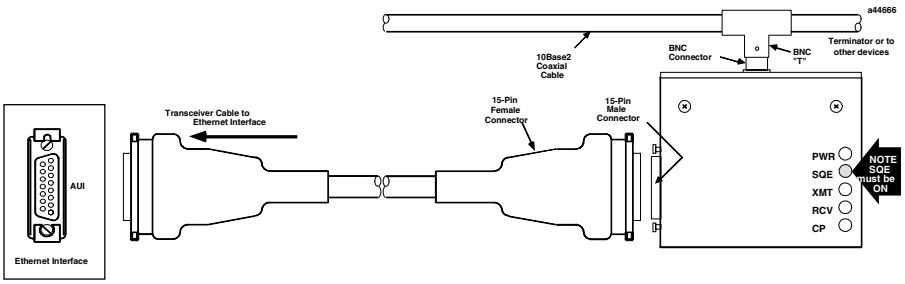

Note

Transceivers must be compatible with the IEEE 802.3 standard and must have the SQE option Enabled.

Caution

PLC power must be OFF when connecting or disconnecting the transceiver.

Appendix C PC Software Loader

Note

For the IC693CPU374, operating firmware for both the PLC CPU and the Embedded Ethernet Interface are upgraded via the power supply serial port. This appendix does not apply to the CPU374. See <reference CPU manual? here>for CPU374 upgrade instructions .

The GE Fanuc Series 90 Ethernet Interface has its operating firmware stored in FLASH memory as opposed to EPROMS. You can perform a firmware upgrade for your Ethernet Interface while the PLC remains powered on and running. However, Ethernet communication through your Interface will be interrupted until the upgrade has completed successfully.

A firmware upgrade for the Ethernet Interface is provided on a floppy diskette. A Firmware Update Utility, provided on the floppy diskette in both a Windows®-based and a DOS®-based version, controls the download of new firmware from the floppy diskette to the FLASH memory. To perform the upgrade using a personal computer (PC) running Windows 95, Windows 98, or Windows NT 4.0, refer to the section "Updating Firmware Under Windows" below for instructions to use the WinLoader program. To perform the upgrade using a PC running MS-DOS® (Revision 3.3 or higher), Windows 3.11, or Windows NT 3.51, refer to the section "Updating Firmware Under DOS and Windows 3.xx" later in this appendix for instructions to use the PC Software Loader program. The program that you run on the PC is referred to as the "Firmware Update Utility" in the instructions that follow.

Note

For the Series 90-70 Ethernet Interface (Type 2) only, it is not possible to perform a firmware load to this Ethernet Interface while it is operating with an IC697 PLC CPU running firmware Release 4.12 through 5.50. Do not attempt to do so - the operation will fail. Move the Interface to a IC697 PLC CPU system running firmware Release 6.00 or higher to perform the firmware load.

Updating Firmware Under Windows

You will need an IBM compatible PC running Windows 95, Windows 98, or Windows NT 4.0, equipped with a 3.5 inch high-density diskette drive and an RS-232 serial port. The firmware update process requires 500 KB of hard drive space. If you are using Windows 3.xx or Windows NT 3.51, follow the instructions in the "Updating Firmware under DOS" section.

To install the new firmware, perform the following steps

1. Connect one of the serial ports on your PC to the Software Loader Port on your Ethernet Interface.

   - For the IC693CMM321 Series 90-30 Ethernet Interface (AAUI-only Type) and for the IC697CMM742 Series 90-70 Ethernet Interface (Type 2), use cable assembly IC690ACC901.
   - For the IC693CMM321 Series 90-30 Ethernet Interface (10Base-T Type) and for the IC693CPU364 Embedded Ethernet Interface, use serial cable IC693CBL316A.

   Exit any application that is using this PC serial port (such as PLC programming software). Connect the proper serial cable to the Ethernet Interface and to the PC. See Appendix B, "Communications Ports Characteristics", for more information.

2. Insert the update diskette into the diskette drive of your PC.

3. Invoke the WinLoader Utility by either double clicking its icon displayed by Windows Explorer, or use the "Run…" selection of the Start menu and specify the location of the WinLoader Utility, e.g. "a:\winloader".

4. The WinLoader Utility uses the COM1 port of your PC by default. If you connected your cable to COM1, skip the rest of this step. If you connected your cable to a different com port, use WinLoader's "COM Port" drop-down box to select the proper com port.

5. In most cases, you should not need to adjust the serial port settings that the WinLoader Utility uses. No adjustment is necessary if your Ethernet Interface's Software Loader port configuration is set for:

   - 19,200 baud
   - ODD parity
   - 8 data bits
   - 0 modem turnaround time

   If other settings are used, you must modify the serial port configuration used by the Firmware Update Utility to use the same serial configuration as your Interface each time you run the Firmware Update Utility.

   To do this, click the "Settings" button and select the matching serial port settings. Then click "OK" to activate the new settings.

6. To prepare the Ethernet Interface to receive a firmware load, follow the steps below:

   With your Ethernet Interface installed in a PLC, powered on and functioning, press the restart button near the top of your Ethernet Interface and hold it down for five seconds. When the button is first pressed, all green LED indicators will go out. After five seconds, the bottom LED will go on, indicating that your Interface will enter the load state when the button is released. Release the button. All LEDs will flash briefly and then begin to blink simultaneously. At this point, your Interface is ready to accept a firmware load. (Note: If you hold the restart button down too long, the Ethernet Interface will enter maintenance

mode rather than firmware load mode. To return to operational mode, press and hold the restart button briefly (less than 5 seconds). Then re-execute the instructions in this step.)

If all LEDs are not blinking after this step, but your Interface seems to operate normally when first powered on, there may be a hardware failure of the loader port. Use the PLC programming software to check the PLC fault table for a "Module hardware fault" message from the rack and slot location of your Interface. You can also check the text displayed by the Ethernet Interface's local station manager NODE command for a "Power up diagnostics result" message about the Software Loader port. See TCP/IP Ethernet Communications for the Series 90 PLC Station Manager Manual, GFK-1186, for details. The Firmware Update Utility will not function if there is a hardware failure of the Ethernet Interface Software Loader port. The Interface will be inoperative until it is power cycled. It should be replaced.

7. Click the “Update” button to begin loading the new firmware. A progress bar is displayed across the bottom of the window. The firmware load will take approximately 3-4 minutes to complete at 38,400 baud rate.

8. Upon completion of the update, a dialog box will appear indicating the completion status of the update. If the load completed successfully, the Firmware Update Utility asks you if you want to update another Interface. Click “No” if this is the last update. If there are more, click “Yes”, move the serial cable to the next Interface, adjust the serial settings if necessary, prepare the Interface to receive a load, and click “Update” again.

9. If the firmware load fails, a window appears indicating the specific error condition that occurred. Take appropriate steps to correct the error and retry the update. Refer to **Restarting An Interrupted Firmware Upgrade** below.

10. When the firmware load has completed, the Ethernet Interface will automatically restart itself. Disconnect the serial cable.

    Place the label accompanying the floppy diskette marked “UPDATED TO FIRMWARE VERSION x.xx” adjacent to existing product label.

Restarting an Interrupted Firmware Upgrade

1. Carefully check the cables, the RS-232/RS-485 converter (if used), and all connections. It is important to use the recommended cable assembly or equivalent. Use of non-standard cables (especially cables that are very long) can inhibit the Firmware Update Utility from successfully communicating with the Ethernet Interface.

2. Briefly press and release the Ethernet Interface Restart button. Depending on how far the previous upgrade progressed before it failed, your Ethernet Interface may restart in either operational mode or firmware load mode. If all LEDs are blinking simultaneously, skip to step 3 now.

   If your Interface is in operational mode, press and hold the Restart button for five seconds until the lower LED lights. Release the button and verify that all LEDs are blinking simultaneously. If all LEDs are off, replace your Interface. Otherwise proceed to step 3. (Note: If you hold the restart button down too long, the Ethernet Interface will enter maintenance mode. To return to operational mode, press and hold the restart button briefly (less than 5 seconds). Then re-execute the instructions in this step.)

3. You must exit the Firmware Update Utility (on the PC) and start it again, then repeat the update process.

If your previous attempt progressed beyond the FLASH memory erase step, began loading data blocks, and then displayed an error message or stalled, try a lower baud rate. If you were using an MS-DOS box under Microsoft Windows, exit from Windows and run the Firmware Update Utility directly from MS-DOS.

Updating Firmware Under DOS and Windows 3.xx

You will need an IBM PC/AT compatible PC running MS-DOS (Revision 3.3 or later), Windows 3.11, or Windows NT 3.51, equipped with at least 640K free RAM, a 3.5 inch high-density diskette drive, and an RS-232 serial port. The firmware update process is faster when 1 MB of hard drive space is also available.

You may be able to run the Firmware Update Utility in an MS-DOS box under Microsoft Windows® if your PC has all of the following:

- A 486 or higher microprocessor;
- A high speed serial port (16550AF or equivalent UART); and
- Microsoft Windows 3.11 (including Windows for Workgroups 3.11), Windows 95, Windows 98, or Windows NT.

If you are not sure your PC has all of these, you will probably save time by exiting from Windows and running the Firmware Update Utility directly from MS-DOS. The upgrade will be faster and more reliable.

Under Windows, run the loader in full screen mode for best performance.

To install the new firmware, perform the following steps

1. Connect either the COM1 or COM2 port on your PC to the Software Loader Port on your Ethernet Interface.
   - For the Series 90-30 Ethernet Interface and the Series 90-70 Ethernet Interface (Type 2), use cable assembly IC690ACC901.
   - For the Series 90-30 CPU364 Embedded Ethernet Interface, use serial cable IC693CBL316A.

   If you also use your PC to run Logicmaster 90 through COM1 or COM2, simply move the cable connector from the PLC CPU to your Interface. The Firmware Update Utility is unable to use COM3 or COM4.

2. Insert the update diskette into the A or B floppy diskette drive of your PC.

3. At the **C:\>** prompt, type **a:install** (or **b:install** if the diskette is in drive B) followed by the Enter key. The install program will copy several files to your hard drive and then run the Firmware Update Utility program. These files will be removed upon completion of the update.

   Install can also run from the floppy drive directly if there is no hard drive or not enough space on the hard drive. To run from the floppy, type install at the **A:\>** (or **B:\>**) prompt followed by the Enter key.

4. The Firmware Update Utility uses the COM1 port of your PC by default. If you connected your cable to COM1, skip the rest of this step. If you connected your cable to COM2, press the F3 key from the Firmware Update Utility main menu. Then use Tab to select COM2, and Enter to accept the new setting.

5. Do not press any function keys in the Firmware Update Utility main menu until your Ethernet Interface is ready to receive a firmware load. Follow these steps:

With your Ethernet Interface installed in a PLC, powered on and functioning, press the restart button near the top of your Interface and hold it down for five seconds. When the button is first pressed, all LED indicators will go out. After five seconds, the bottom LED will go on, indicating that your Interface will enter the load state when the button is released. Release the button. All LEDs will flash briefly and then begin to blink simultaneously. At this point, your Interface is ready to accept a firmware load. (Note: If you hold the restart button down too long, the Ethernet Interface will enter maintenance mode. To return to operational mode, press and hold the restart button briefly (less than 5 seconds). Then re-execute the instructions in this step.)

If all LEDs are not blinking after this step, but your Interface seems to operate normally when first powered on, there may be a hardware failure of the Software Loader port. Use the PLC programming software to check the PLC fault table for a "Module hardware fault" message from the rack and slot location of your Interface. You can also check the text displayed by the Ethernet Interface's local station manager **NODE** command for a "Power up diagnostics result" message about the Software Loader port. See TCP/IP Ethernet Communications for the Series 90 PLC Station Manager Manual, GFK-1186, for details.

The Firmware Update Utility will not function if there is a hardware failure of Ethernet Interface Software Loader port. The Interface will be inoperative until it is power cycled. It should be replaced.

6. If the configuration data stored in your PLC for the Software Loader port of your Ethernet Interface is identical to the default values (19,200 baud, ODD parity, 8 data bits, 1 stop bit, 0 modem turnaround time), skip the rest of this step.

   The Firmware Update Utility will be unable to communicate with your Ethernet Interface unless both use the same serial port settings. If your Ethernet Interface's Software Loader port configuration is different from the defaults for Ethernet Interface modules, you must set the Firmware Update Utility to use the same serial configuration as your Interface each time you run the Firmware Update Utility program. Press the F2 function key from the Firmware Update Utility main menu to select the Loader Baud Rate menu. Use the Up/Down Cursor and Tab keys to select serial port settings that are identical to the Logicmaster configuration of your Interface. Then type Enter to accept the new settings.

   WARNING: The Firmware Update Utility communicates using 8 data bits. This item is not configurable from the Loader Baud Rate menu. The Firmware Update Utility will always fail unless the Ethernet Interface's Software Loader port is configured for 8 data bits.

7. From the Firmware Update Utility main menu, press the F1 function key to attach to the Ethernet Interface. The message

   ```
   << Sending ATTACH - try # 1 >>
   ```

   will appear. If all is well, this message will blink off briefly and then reappear. If the attach fails, check the serial connection and the Ethernet Interface Software Loader port configuration, and then carefully repeat steps 1 through 7.

8. When the

   ```
   >> BOOT MODE ACTIVE <<
   ```

   message appears, you can press the F2 function key to change the baud rate on both ends of the connection. Press the Tab key once to change from 19,200 to 38,400 baud. Select a lower baud rate by holding the Shift key down while pressing Tab. Press the Enter key to accept the new setting.

9. Another

   ```
   >> BOOT MODE ACTIVE <<
   ```

   message will appear. Press the F1 function key to update the firmware. This message will appear:

   ```
   THIS WILL ERASE ALL FIRMWARE!

   ONCE STARTED YOU CANNOT ABORT

      ARE YOU SURE ?!? (Y/N)
   ```

   WARNING: Pressing the 'y' or 'Y' key at this point will commit you to completing the firmware load. The Interface will not function again until the load completes successfully.

   Press the 'y' key to proceed. The firmware load will take approximately 3-4 minutes at 38,400 baud, 5-6 minutes at 19,200 baud, or 9-10 minutes at 9,600 baud. Upon successful completion, the files that were added to your hard drive are removed.

   If the firmware load fails, please refer to **Restarting An Interrupted Firmware Upgrade** in the previous section.

10. When the firmware load has completed, the Ethernet Interface will automatically restart itself. Disconnect the serial cable.

    The Firmware Update Utility will remind you to attach a product upgrade identification label to your Interface. Place the label accompanying the floppy diskette marked “UPDATED TO FIRMWARE VERSION x.xx” adjacent to existing product label.

Appendix D

Using the IC697CMM742 with PLC CPU Versions 4.12 - 5.50

The IC697CMM742 Ethernet Interface (Type 2) is designed for high-performance operation and convenient installation with IC697 PLC CPU versions 6.00 and later. These PLC CPUs recognize and support the Ethernet Interface (Type 2), and provide the high throughput demanded by this product. GE Fanuc recommends use of IC697 PLC CPUs with version 6.00 and later firmware to obtain the full capabilities of the Ethernet Interface (Type 2).

Versions 1.10 and later of the Ethernet Interface (Type 2) also provide restricted operation with IC697 PLC CPUs running firmware versions 4.12 through 5.50. These notes describe the necessary Ethernet Interface configuration and restricted operation with these PLC CPUs.

The Ethernet Interface (Type 2) cannot be used with PLC CPU firmware versions prior to 4.12.

Ethernet Interface Installation and Configuration

The Ethernet Interface (Type 2) is installed in the main PLC rack as described in the Installation chapter.

IC697 PLC CPU firmware versions 4.12 though 5.50 do not accept PLC configuration data for the Ethernet Interface (Type 2). Thus, this Ethernet Interface cannot be configured as described in the Installation chapter. An alternative method is provided below; this procedure uses a user-supplied computer terminal or equivalent plus the Station Manager software within the Ethernet Interface to enter the necessary configuration data. The Station Manager is completely described in GFK-1186, *TCP/IP Ethernet Communications for the Series 90 PLC Station Manager Manual*. Please refer to this manual for complete details.

Alternate Procedure for Configuring the Ethernet Interface (with PLC CPU versions 4.12 through 5.50)

IC697 PLC CPU firmware versions prior to version 6.00 do not accept configuration data for the Ethernet Interface (Type 2). Thus the Ethernet Interface (Type 2) *cannot* be configured by the IC641 PLC Configuration software. Instead, a dummy module must be configured in place of the Ethernet Interface; the Station Manager software within the Ethernet Interface is then used to enter configuration data directly at the module.

First, create a dummy entry in the PLC Configuration for the rack and slot where the Ethernet Interface is installed.

1. Connect a PC running the IC641 PLC Configuration software to the PLC via the built-in serial port on the PLC CPU module. Then access the I/O Configuration screen of the IC641 PLC Configuration software.

2. Move the cursor to the rack and slot where the Ethernet Interface (Type 2) is installed. This slot must be configured as a "3rd Party VME module" as follows: From the I/O Configuration screen, press the vme soft key (F7). From the next screen, press the vme soft key (F1), then move the cursor to the 3RD PARTY VME MODULE selection and press the Enter key to select. Press the Escape key to return to the I/O Configuration screen. The slot containing the Ethernet Interface will be displayed as "3PY VME".

   If there is no **vme** soft key in the I/O Configuration screen, configure the rack and slot where the Ethernet Interface (Type 2) is installed as a "Blank jumper" as follows: Press the **m70_io** soft key **(F1)**. From the next screen, press the **other** soft key **(F7)**, then move the cursor to the BLANK SLOT INTERRUPT JUMPER selection and press the **Enter** key to select. Press the **Escape** key to return to the I/O Configuration screen. The slot containing the Ethernet Interface will be displayed as "JUMPER".

3. Press the Escape key to save the PLC configuration to disk.

4. Use of the dummy module type above will always result in a Configuration Mismatch error at each power up, configuration store, or Ethernet Interface restart. To prevent this error from putting the PLC into STOP/FAULT state, change the severity of this error as follows:

   From the main PLC Configurator screen, press the **cpu** soft key **(F2)** to display the CPU configuration, then press the **fltcfg** key **(F5)** to display the Fault Categories. Press the down arrow key **()** repeatedly until Fault Type is "System Config Mismatch", then press the Tab key to change the Fault Category from "F" (= Fatal) to "D" (= Diagnostic). Press the **Escape** key twice to store the fault categories to the PLC CPU and return to the main PLC Configurator screen

5. Store the PLC configuration to the PLC.

   Now configure the Ethernet Interface (Type 2) locally using its onboard Station Manager. Refer to GFK-1186, *TCP/IP Ethernet Communications for the Series 90 PLC Station Manager Manual,* for complete information on Station Manager operation.

6. Connect a standard ASCII terminal or PC-based terminal emulator to the Station Manager (RS-232) serial port on the Ethernet Interface. Use the NODE Station Manager command to verify that the terminal or emulator is properly communicating with the Station Manager software in the Ethernet Interface. A typical NODE command is shown below:

```
> node
IC697 PLC Factory LAN Ethernet Interface (Type 2)
Copyright (c) 1996. All rights reserved.
Version 1.10  (25A1) TCP/IP
Version 1.00  (12A1)  Software Loader
IP Address =  0.0.0.0
MAC Address = 080019010688
*** PLC CPU version (5.00) supports restricted LAN
Interface operation:
***   SRTP server only (client operation is not permitted)
***   LAN Interface cannot be configured with PLC
Configurator
***      (Use CHSOSW Station Manager cmd to enter module
configuration)
***   PLC CPU version 6.00 or higher is required for full
operation
```

If the Ethernet Interface has not been previously configured, the NODE output will also indicate that the Ethernet Interface is waiting for a valid IP address.

7. Use the LOGIN Station Manager command to "log in" in order to access the Modify-level commands needed later. The LOGIN command is shown below:

```
> login
```

After entering the LOGIN command, the Station Manager prompts for the Modify-level password:

```
Password:
```

Enter your password (which is not echoed). The default password is: system (lower case). If the password matches the current Modify-level password, a confirmation message is displayed; the Station Manager prompt changes from ">" to "=".

8. Use the Modify-level *MAINT* Station Manager command to restart the Ethernet Interface into the Maintenance state. The *MAINT* command is shown below:

```
= maint
Restarting module into Maintenance state
```

The Ethernet Interface is restarted into the Maintenance state. After approximately 20 seconds, another NODE output is automatically generated when the restart is complete. The display will also indicate that the Ethernet Interface is in the Maintenance state; the Station Manager prompt is "*". Modify-level login is not required in the Maintenance state.

9. Use the *CHSOSW* Station Manager commands to enter the configuration data for this Ethernet Interface. The IP addressing parameters (*ip_address*, *subnet_mask*, *gateway*, and *name_server*) must be set to values supplied by the person in charge of your network (the network administrator). TCP/IP network administrators are familiar with these parameters. It is important that these parameters are correct, otherwise the Ethernet Interface may be unable to communicate on the network and/or network operation may be corrupted. It is especially important that each node on the network is assigned a *unique* IP address.

   Enter the IP Address as follows:

   ```
   * chsosw ip_address <a.b.c.d>
   ```

   where `<a.b.c.d>` is the unique dotted-decimal IP address for this node.

   Enter the Subnet Mask as follows:

   ```
   * chsosw subnet_mask <a.b.c.d>
   ```

   where `<a.b.c.d>` is the dotted-decimal subnet mask for this network segment.

   Enter the Gateway IP Address as follows:

   ```
   * chsosw gateway <a.b.c.d>
   ```

   where `<a.b.c.d>` is the unique dotted-decimal IP address of the gateway device.

   Enter the Name Server IP Address as follows:

   ```
   * chsosw name_server <a.b.c.d>
   ```

   where `<a.b.c.d>` is the unique dotted-decimal IP address of the name server device.

   The *CHSOSW* command may also be used to change the parameters for either serial port on the Ethernet Interface in cases where the default serial port configuration values are not used. Refer to GFK-1186, *TCP/IP Ethernet Communications for the Series 90 PLC Station Manager Manual,* for further information.

   A typical *CHSOSW* command is shown below:

   ```
   * chsosw ip_address 10.0.0.1
   ```

   Once entered, the configuration parameters are retained in non-volatile flash memory for use each time the Ethernet Interface is powered up or restarted. Configuration needs to be re-entered only when changing one or more configuration parameters.

10. Use the SOSW Station Manager command to verify that all configuration parameters have been set to the proper values. A typical SOSW command is shown below:

```
* sosw
<<< Soft Switch Data >>>

IP Address   = 10.0.0.1        (TCP/IP values from
Soft Switches)
Subnet Mask  = 0.0.0.0
Gateway      = 0.0.0.0
Name Server  = 0.0.0.0

Port 1 (Station Manager):      Port 2 (S/W Loader):
Data Rate      = 9600          Data Rate     = 19200
Parity         = NONE          Parity        = ODD
Stop Bits      = 1             Stop Bits     = 1
Flow Control   = NONE          Flow Control  = NONE
TurnA Delay    = NONE          TurnA Delay   = NONE
Timeout        = LONG          Timeout       = LONG

Source of Soft Switches: Internal Backup
```

11. When all configuration parameters have been correctly entered, use the *RESTART* Station Manager command to restart the Ethernet Interface into normal operation.
The *RESTART* command is shown below:

```
= restart
Restarting module
```

The Ethernet Interface is restarted into the Operational state. After approximately 20 seconds, another NODE output is automatically generated when the restart is complete. The NODE output should indicate the IP Address configured in Step 9, above. (The Subnet Mask, Gateway IP Address and Name Server IP Address can be displayed by the SOSW command, as described in Step 10, above.) The Ethernet Interface is now properly configured and ready for use.

Please proceed to the Installation chapter to verify proper operation of the Ethernet Interface with the new configuration data.

Ethernet Interface Operational Restrictions

The Ethernet Interface (Type 2) operates with some restrictions when used with IC697 PLC CPU versions 4.12 through 5.50. These Operational Restrictions, together with differences in Startup, Station Manager and Software Loader operation, are described below.

- COMMREQ operation is not supported. Any COMMREQ issued to the Ethernet Interface is ignored; a COMMREQ Status (CRS) word is *not* returned to the PLC. Instead, the Ethernet Interface generates an event in its internal exception log (Event = 1c; Entry 2 = 11H) indicating that the Channel API task is not active. The Ethernet Interface also generates an entry in the PLC Fault Table: ("`LAN system-software fault; resuming`")
- The Ethernet Interface returns neither LAN Interface Status (LIS) nor Channel Status data to the PLC.
- PLC CPU models IC697CPU73x and IC697CPU77x may limit the overall performance of a PLC used as a server device. Under heavy load from other clients and hosts on the network, the server PLC may generate errors with major error code 07, indicating that the volume of requests from the network have momentarily exceeded the processing capacity of the PLC CPU. The request will need to be retried. If possible, try to reduce the volume of requests to the server PLC when this condition occurs. If the system design requires data rates beyond the capacity of the server PLC CPU, please consider upgrading to a more powerful CPU model.

Startup

- Upon each powerup or restart of the Ethernet Interface, or configuration store to the PLC, the following entry will be generated in the PLC Fault Table for the slot containing the Ethernet Interface: ("`Reset of, addition of, or extra option module`").
- When operating with PLC CPU versions prior to 6.00, the Ethernet Interface does *not* generate the exceptions or PLC Faults that normally occur when Ethernet Interface does not receive module configuration from the PLC CPU.
- Each powerup and restart of the Ethernet Interface takes approximately 20 seconds. This is roughly 10 seconds longer than required when the Ethernet Interface is used with PLC CPU versions 6.00 and later.

Station Manager

- The STAT C command (PLC Driver status) does not display the current PLC CPU state (RUN/STOP and I/O ENABLED/ I/O DISABLED).
- In the TALLY C command output (PLC Driver tallies), the "PlcSweep" tally does not count the number of PLC sweeps. This tally should be ignored.
- The STAT H command (Channel API status) always indicates "`Channel API task not initialized`"
- As detailed in "Ethernet Interface Installation and Configuration", special restricted operation notification is displayed with the startup message and by the NODE command.

Software Loader

It is not possible to perform a fimware load to this Ethernet Interface while it is operating with a Series 90-70 PLC CPU running firmware Release 4.12 through 5.50. Do not attempt to do so – the operation will fail. Move the Interface to a Series 90-70 PLC CPU system running firmware Release 6.00 or higher to perform the firmware load

Appendix E

Translating PLC CPU Reference Addresses to Modbus Register Addresses for the IC693CMM321

The Modbus/TCP protocol defines operations on a set of reference tables (Register, Input Register, Input Discrete, and Coil); these Modbus tables differ from the PLC reference tables within the PLC CPU (%I, %AI, %Q, %AQ, %M, and %R). To implement the Modbus/TCP protocol, the IC693CMM321 maps each of the Modbus tables into one or more PLC CPU tables (see Table below). The IC693CMM321 makes no distinction between the Register and Input Register tables.

IC693CMM321 Internal Tables	Modbus Register Table (4xxxxx)	Modbus Input Register Table (3xxxxx)	Modbus Input Discrete Table (1xxxx)	Modbus Coil Table (0xxxx)
%I1 – 4096 (bits)	1 – 256 (16-bit words)	1 – 256 (16-bit words)	1 – 4096 (bits)	---
%AI1 – 16384 (16-bit words)	257 – 16640 (16-bit words)	257 – 16640 (16-bit words)	---	---
%Q1 – 4096 (bits)	16641 – 16896 (16-bit words)	16641 – 16896 (16-bit words)	---	1 – 4096 (bits)
%AQ1 – 12288 (16-bit words)	16897 – 29184 (16-bit words)	16897 – 29184 (16-bit words)	---	---
%R1 – 32640 (16-bit words)	29185 – 61824 (16-bit words)	29185 – 61824 (16-bit words)	---	---
%M1 – 4096 (bits)	61825 – 62080 (16-bit words)	61825 – 62080 (16-bit words)	---	---
Mapping Code (16-bit word)	65535 (16-bit word)	65535 (16-bit word)	---	---

Table E-1 - Modbus Register / IC693CMM321 Reference Table Translation

Note: The Mapping Code is a read-only address. A client may read this address to determine the mapping in use without knowing what type of device this is. The IC693CMM321 will return a 1 when this register is read, indicating that the above mapping in is use.

1

10Base2, 1-4
Ethernet transceiver, B-17
10Base2 port, B-11
Series 90-70 Ethernet Interface (Type 2), 2-44
10Base5, 1-5
10Base-F, 1-5
10Base-T, 1-4
Ethernet transceiver, B-15
port information, B-6, B-8
10Base-T port
Series 90-70 Ethernet Interface (Type 2), 2-44
Series 90-70 Ethernet Interface (Type 2), 2-44
new style IC693CMM321, 2-5
Series 90-30 CPU364, 2-19
10Broad36, 1-5

A

AAUI
connector on transceiver, B-17
AAUI port, 1-4, B-13
new style IC693CMM321, 2-5
Series 90-30 CPU364, 2-19
AAUI transceiver, B-14
Abort Channel command (2001), 3-28
Aborting a channel, 3-9
Adapter (RS-232 to RS-485 converter), B-5
Adapter Names, 5-21
Aliases, 5-21
AUI port, 1-4, B-19
Series 90-70 Ethernet Interface (Type 2), 2-44

B

Battery, 2-43
Blown Fuse status bits, 3-34, 4-21
Board Indicators
new style IC693CMM321, 2-3
Series 90-30 CPU364, 2-17, 2-30
Series 90-70 Ethernet Interface (Type 2), 2-41
BOOTP, 2-53

C

Cable
AUI transceiver, B-20
Ethernet, 1-5
IC690ACC901, B-5
IC693CBL316A, B-3
Capabilities of the Ethernet Interface, 1-3
Channel Command, 3-2, 3-3, 4-2, 4-3
Channel Commands, 3-9, 4-8
Abort Channel (2001), 3-28
Channel number, 3-11, 3-17, 3-23, 3-28, 3-30, 4-9, 4-12, 4-14, 4-15, 4-17, 4-18, 4-19
Command period, 3-11, 3-18, 3-24, 4-9, 4-13, 4-14, 4-15
Establish Read Channel (2003), 3-10
Establish Write Channel (2004), 3-17, 4-11, 4-16
Local, 3-28, 3-30
Number of repetitions, 3-11, 3-18, 3-23, 4-9, 4-12, 4-14, 4-15, 4-17, 4-18, 4-19
Retrieve Detailed Channel Status (2002), 3-29
Send Information Report (2010), 3-23
Timeout, 3-12, 3-18, 3-24, 4-13, 4-14, 4-15, 4-17, 4-18, 4-19
Channel Error bit, 3-34, 3-35, 3-47, 4-22, 4-34
Channel Status bits, 3-2, 3-4, 4-2, 4-3
Channel Status words, 3-29
Channels
Aborting, 3-9
Establishing, 3-9, 4-8, 4-10
Maximum that can be established, 3-3
Monitoring, 3-46, 4-34
Numbers assigned, 3-11, 3-17, 3-23, 3-28, 3-30, 4-9, 4-12, 4-14, 4-15, 4-17, 4-18, 4-19
Re-tasking, 3-9
Retrieving Detailed Status on, 3-9
Client PLC, 3-10, 3-15, 3-17, 4-9, 4-10, 4-12, 4-14, 4-15, 4-17, 4-18, 4-19
Client/Server Capability, 1-2
Command Block, 3-2, 3-3, 3-7, 4-2, 4-3, 4-6
COMMREQ Function Block, 3-2, 3-3, 3-6, 4-2, 4-5
COMMREQ functions, maximum pending, 3-47, 4-34
COMMREQ Status word, 3-2, 3-4, 3-46, 4-2, 4-3, 4-34
Minor Error Codes, 3-38, 4-24
Pointer, 3-8, 4-7
Communications Ports Characteristics, B-1
Communications Request, 4-2
Communications Status words, 3-31, 3-36, 4-20, 4-23
Configuration Parameters
new style IC693CMM321, 2-9
Series 90-30 CPU364, 2-23, 2-34
Series 90-70 Ethernet Interface (Type 2), 2-49
Configuration Planning, 5-6
Configuring
with Windows-based software, 2-22
with Windows-based software, 2-33
new style IC693CMM321, 2-8
Series 90-30 CPU364, 2-22, 2-33, 2-47
Configuring Ethernet Global Data, 5-16
Configuring Multiple Gateways, 6-7
Consumed Data Exchange Definition, 5-14

Consumer, 5-3
Control software, 2-22, 2-33
Converter (RS-232 to RS-485 adapter), B-5
CRS word, 3-4, 3-46, 4-3, 4-34

D

Data Block, 3-3, 3-8, 4-3, 4-7
  Length, 3-7, 4-6
Data Transfer bit, 3-35, 3-47, 4-22
Data Transfers with One Repetition, 3-48
DCS words, 3-4, 3-36
DDP Name Resolution, 6-11
Default Station Address Label
  Series 90-30 CPU364, 2-5, 2-20, 2-31
  Series 90-70 Ethernet Interface (Type 2), 2-44
Detailed Channel Status words, 3-4, 3-29, 3-36
Determining if an IP address has been used, 2-15, 2-29, 2-40, 2-54
DNS Name Resolution, 6-11

E

Error Codes, COMMREQ
  Minor Error Codes, 3-38, 4-24
Establish Read Channel command (2003), 3-10
Establish Write Channel command (2004), 3-17, 4-11, 4-16
Establishing a channel, 3-9, 4-8, 4-10
Ethernet Global Data
  Configuration Planning, 5-6
  Configuration-Based, 5-12
  Configuring, 5-16
  Consumed Data Exchange Definition, 5-14
  Consumer, 5-3
  Effect of PLC modes and actions on, 5-5
  Examples, 5-17
  Exchange, 5-2
  Exchange Status Word, 5-23
  Group Usage, 5-22
  Maximum data size, 5-6
  Maximum Number of Exchanges, 5-6
  Number of Variables, 5-6
  Operation, 5-4
  PLC Timing Considerations, 5-8
  Produced Data Exchange Definition, 5-12
  Producer, 5-3
  Timestamping, 5-25
Ethernet Global Data (EGD), 5-1
Ethernet Interface, 1-2
  Capabilities, 1-3
Ethernet module
  Series 90-70 Installation, 2-46
Ethernet Ports
  Series 90-30 CPU364, 2-19, 2-31
  Series 90-70 Ethernet Interface (Type 2), 2-44
Ethernet Software, 1-7
Ethernet transceiver
  IC649AEA102, B-15
  IC649AEA103, B-17
Exchange, 5-2
Exchange ID, 5-2
Exchange Status Word
  Ethernet Global Data, 5-23

F

Fault table, 7-4
Fiber-optic cable, 1-5
Flash memory, 1-7
FT Output of the COMMREQ Function Block, 3-4, 3-31, 3-32, 4-3, 4-20, 4-21
Full-duplex
  configuring, 2-11
Fuse
  IC697CMM742, 2-44
  Series 90-30 CPU364, 2-5, 2-20
Fuse status bits, 3-34, 4-21

G

Gateway address, 2-9, 2-24, 2-34, 2-49
Gateways, 6-4
Group Usage, 5-22

H

Hardware failure, 2-14, 2-28, 2-39, 2-53
Host Communications Toolkit, 1-2, 1-3
How to Make it Work, 1-7

I

IC649AEA101
  Obsolete Ethernet transceiver, B-17
IC649AEA102
  Ethernet transceiver, B-15
IC649AEA103
  Ethernet transceiver, B-17
IC690ACC901 cable, B-5
IC693CBL316A cable, B-3
IC693CMM321, 1-1
IC693CMM321 Modbus references, E-1
IC693CPU364, 1-1
IC697CMM742, 1-1
Installation requirements
  IC693CPU364, 2-21, 2-32
  new style IC693CMM321, 2-6
  Series 90-70 Ethernet Interface (Type 2), 2-45
Installing

IC693CPU364, 2-21, 2-32
new style IC693CMM321, 2-6
Series 90-70 Ethernet Interface (Type 2), 2-45
IP address, 2-9, 2-24, 2-34, 2-49
Configuration, 2-24, 2-34, 2-49
Determining if it has been used, 2-15, 2-29, 2-40, 2-54
Isolated network, 2-24, 2-34, 2-49
IP Addresses Reserved for Private Networks, 6-3
IP Addresses, Multicast, 6-3
IP addressing, 6-2

J

Jumper
10Base2 Port, Series 90-70 Ethernet Interface (Type 2), 2-44

L

Ladder programming, 3-43, 4-26
LAN Interface OK bit, 3-34, 4-22
LAN Interface Status bits, 3-2, 3-4, 3-33, 4-2, 4-3, 4-21
LAN OK bit, 3-34, 4-22
LED test, 2-17, 2-31, 2-42
LED test, 2-3
LEDs, 2-3, 2-12, 2-17, 2-26, 2-30, 2-37, 2-41, 2-51
LIS (LAN Interface Status bits), 3-33, 4-21
LIS bits, 3-4, 4-3
Loading Ethernet Interface software, 2-4, 2-18, 2-42
Local Channel commands, 3-28, 3-30
Local PLC, 3-10, 3-15, 3-17, 4-9, 4-10, 4-12, 4-14, 4-15, 4-17, 4-18, 4-19
Local Table Name Resolution, 6-10
Logic program controlling execution of the COMMREQ, 3-4, 4-3

M

MAC Addresses, 6-12
Machine Edition software, 2-22, 2-33
Maintenance state, 2-14, 2-18, 2-28, 2-43, 2-53
new style IC693CMM321, 2-4
Media, 1-5
Modbus tables, E-1
Monitoring the communications channel, 3-46, 4-34
Multicast IP Addresses, 6-3
Multiple Gateways and Subnets, 6-5
Multiple Gateways, Configuring, 6-7

N

Name Assignment, 6-9
Name Resolution, 6-10
Name Server IP address, 2-9, 2-24, 2-34, 2-49
Name Usage, 6-11
Naming Conventions, 5-9
Network Address, 3-9, 3-13, 3-16, 3-22, 3-25, 3-27
Network Address Naming Architecture, 6-9
Network Administration Support, 6-1
New style Series 90-30 Ethernet Interface
Board Indicators, 2-3
Configuration Parameters, 2-9
Configuring, 2-8
Installing, 2-6
Powering-up, 2-12
Requirements to Install, 2-6
Restart Pushbutton, 2-3
Serial Ports, 2-5
Number of repetitions for a Channel Command, 3-11, 3-18, 3-23, 4-9, 4-12, 4-14, 4-15, 4-17, 4-18, 4-19

O

OK Output of the COMMREQ Function Block, 3-32
Older Series 90-70 PLC CPUs, Using IC697CMM742 with, D-1
Operational state, 2-14, 2-28, 2-39, 2-53

P

Part numbers for the Ethernet Interfaces, 1-1
PC Software Loader, 1-7
Period for Channel Commands, 3-11, 3-18, 3-24, 4-9, 4-13, 4-14, 4-15
PING Station Manager command, 2-15, 2-29, 2-40, 2-54
Pinging the TCP/IP Interfaces on the Network, 2-15, 2-29, 2-40, 2-54
PLC Fault Table, 7-4
Ports
10Base2, B-11
10Base-T, B-6, B-8
AAUI, B-13
AUI, B-19
Characteristics, B-1
RS-232, B-2
RS-485, B-4
Ports, Ethernet
Series 90-30 CPU364, 2-19, 2-31
Series 90-70 Ethernet Interface (Type 2), 2-44
Ports, Serial

new style Series 90-30 Ethernet Interface, 2-5
Series 90-30 CPU364 with Embedded Ethernet Interface, 2-19
Powering-up
new style IC693CMM321, 2-12
Power–up problems, 2-12, 2-26, 2-37, 2-51
Power-up states
new style IC693CMM321, 2-13
Series 90-30 CPU364, 2-27, 2-38
Series 90-70 TCP/IP Ethernet Interface (Type 2), 2-52
Private Networks, IP addresses, 6-3
Problems During Power up, 2-12, 2-26, 2-37, 2-51
Produced Data Exchange Definition, 5-12
Producer, 5-3
Producer ID, 5-3

R

Reference assignments for Modbus, E-1
Reloading Ethernet Interface software, 2-4, 2-18, 2-42
Remote PLC, 3-10, 3-15, 3-17, 4-9, 4-10, 4-12, 4-14, 4-15, 4-17, 4-18, 4-19
Repetitions, number of for Channel Commands, 3-11, 3-18, 3-23, 4-9, 4-12, 4-14, 4-15, 4-17, 4-18, 4-19
Resource problem bit, 3-34, 4-22
Restart, 2-17, 2-31, 2-42
Restart Pushbutton
new style Series 90-30 Ethernet Interface, 2-3
Series 90-30 CPU364, 2-17, 2-31
Series 90-70 Ethernet Interface (Type 2), 2-42
Re-tasking a channel, 3-9
Retrieve Detailed Channel Status command (2002), 3-29
RJ11 Serial Port, B-2
RS-232, RJ11 port, B-2
RS-232, RJ-11 port
Series 90-30 CPU364, 2-19, 2-31
Series 90-70 Ethernet Interface (Type 2), 2-43
RS-485 port, B-4
Series 90-70 Ethernet Interface (Type 2), 2-43
Cables and Converters, B-5

S

Sample ladder program, 3-43, 4-26
Send Information Report command (2010), 3-23
Sequencing communications requests, 3-47, 4-34
Serial Number Label
Series 90-30 CPU364, 2-5, 2-20, 2-31
Serial port configuration
data rate, 2-10
Data rate, 2-25, 2-35, 2-50
Flow control, 2-10, 2-25, 2-35, 2-50
Parity, 2-10, 2-25, 2-35, 2-50
Stop bits, 2-10, 2-25, 2-50
Timeout, 2-10, 2-25, 2-50
Turnaround delay, 2-10, 2-25, 2-50
Serial Ports
IC693CPU364, 2-25, 2-35
new style IC693CMM321, 2-5
Series 90-30 CPU364, 2-19
Series 90-30 CPU364 with Embedded Ethernet Interface
10Base-T Port, 2-19
AAUI (Transceiver) Port, 2-19
Board Indicators, 2-17, 2-30
Configuration Parameters, 2-23, 2-34
Configuring, 2-22, 2-33, 2-47
Ethernet Ports, 2-19, 2-31
Installing, 2-21, 2-32
Replaceable Fuse, 2-5, 2-20
Requirements to Install, 2-21, 2-32
Restart Pushbutton, 2-17, 2-31
RS-232, RJ-11 port, 2-19, 2-31
Serial Number Label, 2-5, 2-20, 2-31
Serial Ports, 2-19
States, 2-27, 2-38
Station Address Label, 2-5, 2-20, 2-31
Series 90-30 Ethernet Interface
AAUI (Transceiver) Port, 2-5
States, 2-13
Series 90-70 Ethernet Interface
Using with PLC CPUs (Versions 4.12 - 5.50), D-1
Series 90-70 Ethernet Interface (Type 2)
10Base2, BNC Port, 2-44
10Base-T, RJ-45 Port, 2-44
AUI (Transceiver) Port, 2-44
Board Indicators, 2-41
Configuration Parameters, 2-49
Ethernet Ports, 2-44
Installing, 2-45
Jumper, 10Base2 Port, 2-44
Requirements to Install, 2-45
Restart Pushbutton, 2-42
RS-232, RJ-11 Port, 2-43
RS-485, D-Type Port, 2-43
Service Option Connetor, 2-43
States, 2-52
Station Address Label, 2-44
Server Capability, 1-2
Server PLC, 3-10, 3-15, 3-17, 4-9, 4-10, 4-12, 4-14, 4-15, 4-17, 4-18, 4-19
Service Option Connector, 2-43
Series 90-70 Ethernet Interface (Type 2), 2-43

Simple isolated network configuration, 2-24, 2-34, 2-49
Simple Network Time Protocol, 5-25
SNTP, 5-25
Software Loader, 2-14, 2-28, 2-39, 2-53
Software Loader Port
RS-485, B-4
Series 90-30 CPU364, 2-19, 2-31
Series 90-30 CPU364 Ethernet Interface, B-2
Series 90-70 Ethernet Interface (Type 2), 2-43
SQE, 2-46
Ethernet products, B-15, B-17
Station Address Label
Series 90-30 CPU364, 2-5, 2-20, 2-31
Series 90-70 Ethernet Interface (Type 2), 2-44
Station Manager Port, B-2
IC693CMM321, 2-5
Series 90-30 CPU364, 2-19, 2-31
Series 90-70 Ethernet Interface (Type 2), 2-43
Station Manager software, 1-7
Status address location, 2-23, 2-34
Status bits, 3-2, 3-4, 3-31, 3-33, 4-2, 4-3, 4-20, 4-21
Status data, Channel Commands, 3-4, 4-3
Status on a channel, 3-9
Subnet Addressing and Subnet Masks, 6-5
Subnet mask, 2-9, 2-24, 2-34, 2-49, 6-5
Subnets and Multiple Gateways, 6-5

T

Thick wire, 1-5
Thin wire, 1-4
Time units for command period, 3-11, 3-18, 3-24, 4-9, 4-13, 4-14, 4-15
Timeout for Channel Commands, 3-12, 3-18, 3-24, 4-13, 4-14, 4-15, 4-17, 4-18, 4-19
Timestamping, Ethernet Global Data, 5-25
Transceiver
AAUI, B-14
Transceiver Port
Series 90-30 CPU364, 2-19
Series 90-30 Ethernet Interface, 2-5
Series 90-70 Ethernet Interface (Type 2), 2-44
Troubleshooting
Ladder programs, 3-45, 4-33
Using PLC Fault Table, 7-4
Using the Status bits and Communications Status words, 3-32, 4-21
Troubleshooting the Ethernet Interface, 7-2

U

Updating Ethernet Interface software, 2-4, 2-18, 2-42
Using the IC697CMM742 with PLC CPUs (Versions 4.12 - 5.50), D-1

V

VersaPro software, 2-22, 2-33

W

Waiting for configuration from PLC, 2-14, 2-28, 2-39, 2-53
Waiting for IP address, 2-14, 2-28, 2-39, 2-53